STANDARD STRUCTURE SIZES

F	1.9'	3.0'	4.0'
H	1.8'	1.9'	2.1'
A	4.2'	5.4'	6.6'
S	8.9'	11.3'	13.4'

MATERIAL NOTES:

1. ALUMINUM SHEETS SHALL BE STRUCTURAL PLATE (2.5" X 9.0" CORRUGATIONS) 0.100" THICKNESS.
2. APPLY ASPHALTIC MASTIC BETWEEN ALUMINUM SHEETS BEFORE BOLTING TOGETHER.
3. CONCRETE SHALL HAVE A MINIMUM COMPRESSIVE STRENGTH AT 28 DAYS EQUAL TO 3,000 P.S.I. (6 BAG MIX).

LOCATION			ELEVATIONS										STRUCTURE DIMENSIONS										BILL OF MATERIALS			
STRUCTURE NO.	STATION	BANK	TOP OF LEVEE		TOP OF HEADWALL		EMERG. SPLWY.		WEIR CREST		CONCRETE APRON		F	H	W	B	L	A	S	TILE OUTLET STUB			CONCRETE CT & CA CU.YD.	REINFORCING BARS #4 (1/2" DIA.) LIN.FT.	FILTER DRAIN (0.04 x L) CU.YD.	RIPRAP (0.03 x L) CU.YD.
			PLANNED	AS BUILT	PLANNED	AS BUILT	PLANNED	AS BUILT	PLANNED	AS BUILT	PLANNED	AS BUILT								DIAMETER (INCHES)	CLOCK POSITION	BOTTOM INVERT (FEET BELOW WEIR CREST)				

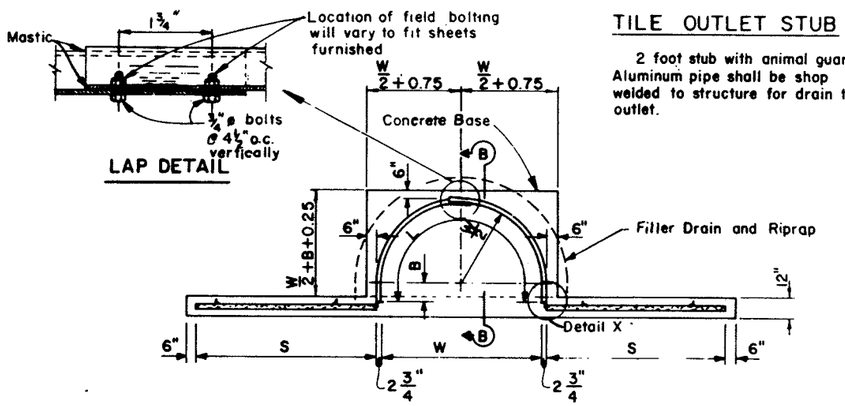

TOP VIEW

TILE OUTLET STUB

2 foot stub with animal guard. Aluminum pipe shall be shop welded to structure for drain tile outlet.

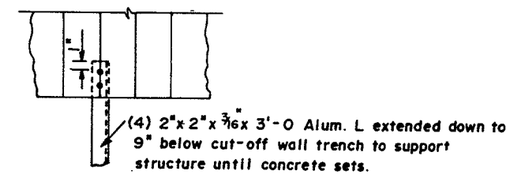

DETAIL A

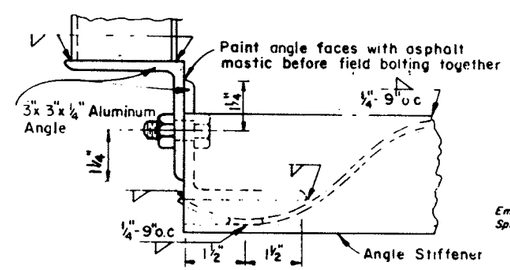

DETAIL X

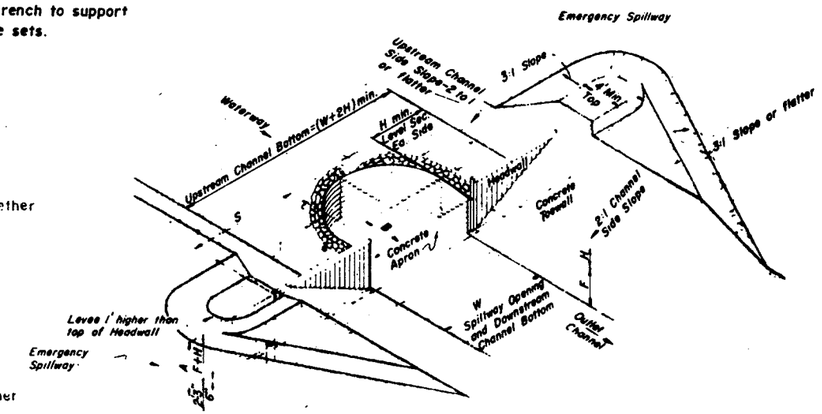

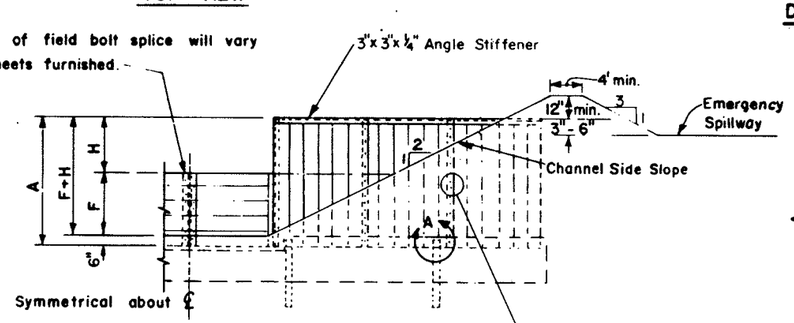

HALF DOWNSTREAM VIEW

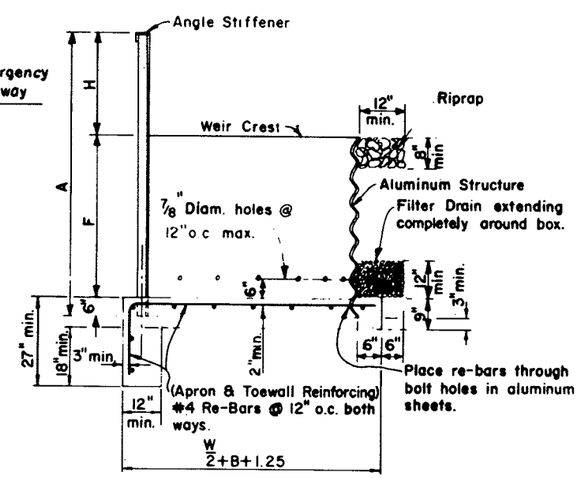

SECTION B-B

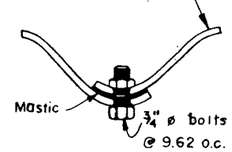

LAP DETAIL

CONSTRUCTION NOTES:

1. EXCAVATE FOR CONCRETE APRON AND TOEWALL IN UNDISTURBED SOIL. SIDE SLOPES ABOVE THE TOP OF CONCRETE SHALL BE 1:1 OR FLATTER.
2. SET ALUMINUM STRUCTURE TO GRADE AND PLACE REINFORCING BARS BEFORE POURING CONCRETE FOR APRON AND TOEWALL.
3. PLACE FILTER DRAIN AND LAY TILE TO OUTLET STUB. FILTER DRAIN SHALL CONSIST OF SAND, GRAVEL, OR CONCRETE AGGREGATE MIXTURE WITH 50 TO 80% PASSING A NO. 4 SIEVE, MAXIMUM SIZE OF 3" AND NOT MORE THAN 5% PASSING A NO. 200 SIEVE.
4. BACKFILL AROUND STRUCTURE WITH MOIST SOIL. PLACE BACKFILL IN SHALLOW LAYERS AND TAMP WELL. REMOVE DRY SOIL FROM SIDES OF EXCAVATIONS AS BACKFILL IS PLACED SO THAT MOIST SOIL IS TAMPED AGAINST MOIST SOIL. KEEP BACKFILL APPROXIMATELY LEVEL AROUND ALL PARTS OF THE STRUCTURE.
5. PLACE RIPRAP AND COMPLETE SHAPING AND GRADING. RIPRAP MAY CONSIST OF WELL-GRADED ROCK. MAXIMUM SIZE 6", OR 8" CONCRETE BLOCK SET WITH CORE OPENINGS UP AND FILLED WITH SOIL.
6. SEED ALL DISTURBED AREAS.

FABRICATED CORRUGATED ALUMINUM TOEWALL DROP SPILLWAY

U. S. DEPARTMENT OF AGRICULTURE
SOIL CONSERVATION SERVICE

Designed	Date	Approved by	
Drawn		Title	
Traced		Title	
Checked		Sheet No. of	Drawing No

MICHIGAN ENGINEERING STANDARD DRAWING

APPROVED BY H.H. Belcher, S.C.E.	DATE 8/26/82
DRAWING NO. 80-E-0332	SHEET 1 OF 1

Reference: E.F.M. SUPPLEMENT MI. NOTICE 4

ADAPTED FROM INDIANA STAND. DRWG 5,E-35,147

Not to Scale