Instructions for South Dakota Job Plan 14.5C and 12B

Used Heavy Equipment Tire Casing Stockwater Tank
and
Stockwater Pipeline Appurtenances

Fill in the data fields on this page to automatically fill in the title block on the drawing. You will also need to complete the fields on the drawing.

Clear Form

Producer	
Section	
Township	
Range	
County	

Who / When	Who (initials)	When (MM/DD/YY)
Designed		
Drawn		
Checked		
Approved		

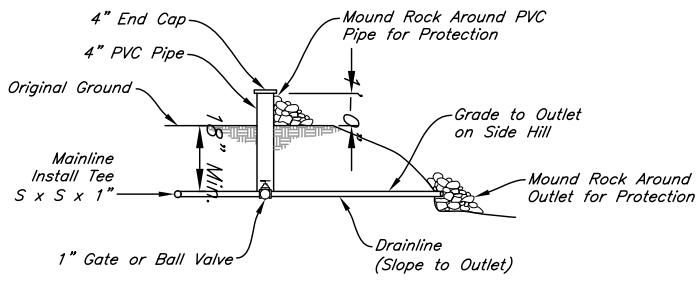

TYPICAL DRAIN INSTALLATION FOR SHALLOW BURY PIPELINES

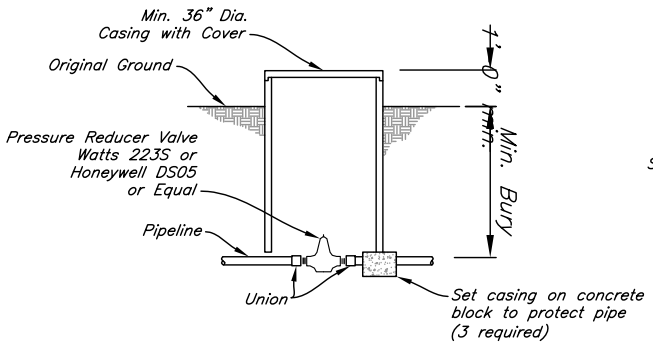

TYPICAL PRESSURE REDUCER INSTALLATION

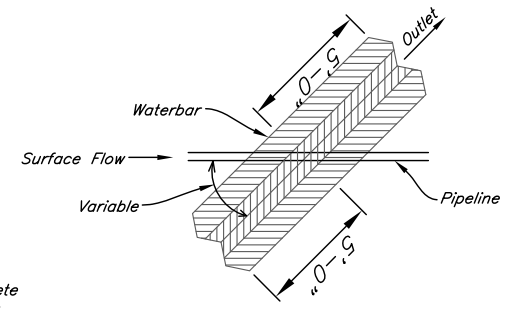

PLAN VIEW

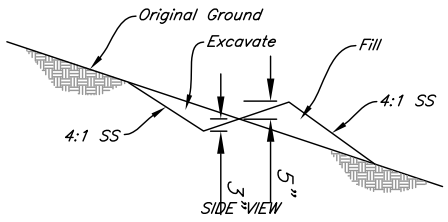

SIDE VIEW

TYPICAL WATERBAR INSTALLATION

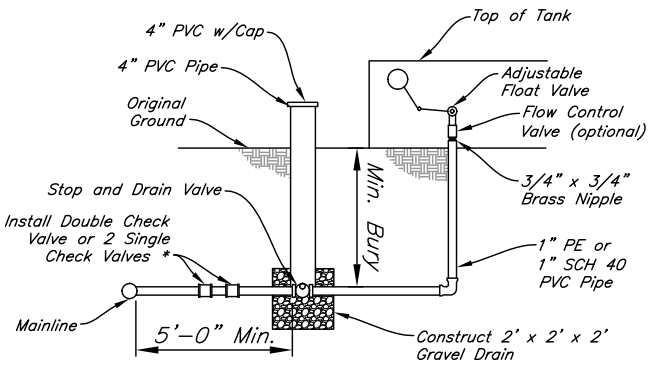

TYPICAL STOP AND DRAIN INSTALLATION

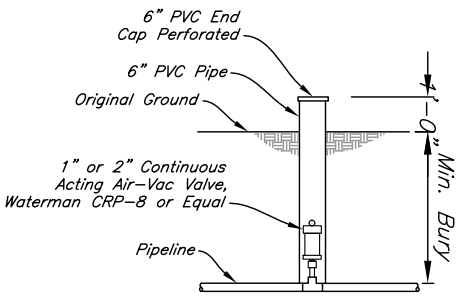

TYPICAL AIR-VAC VALVE INSTALLATION
(IN RISER)

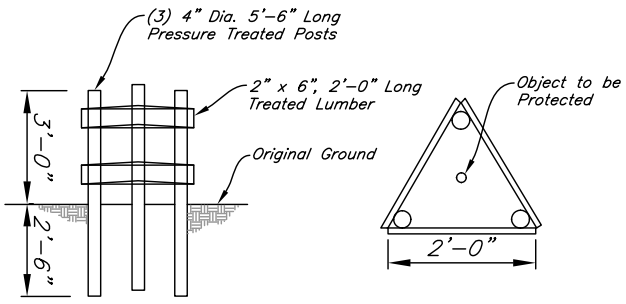

TYPICAL GUARD POST INSTALLATION
(Use to Protect Above Ground Appurtenances from Livestock)

MATERIAL LIST	
ITEM	*QUANTITY*
4" dia. 5'-6" Long Pressure Treated Posts	*3*
2" x 6" x 2'-0" Pressure Treated Lumber	*6*
3/8" Dia. 4" Long Lag Screws or #16 Ring Shank Nails	*24*

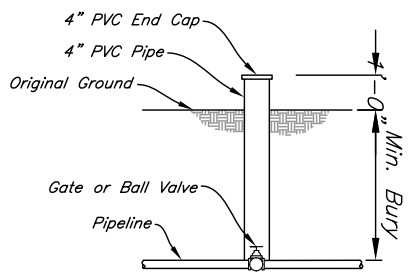

TYPICAL GATE OR BALL VALVE INSTALLATION
(IN RISER)

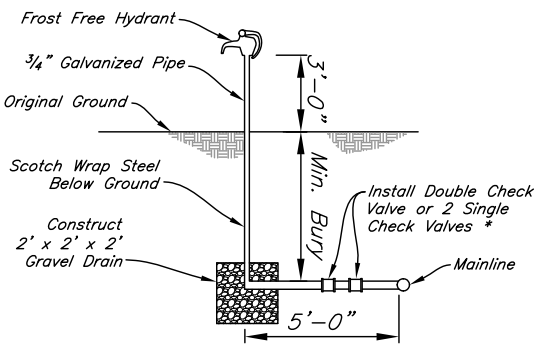

TYPICAL HYDRANT INSTALLATION

** Required if Mainline Serves Household or Other Potable Use.*

STOCKWATER PIPELINE APPURTENANCES
JOB PLAN 12B 05/2012

TANK SELECTION		
DATE	APPROVED	TITLE
01/24/05	Steven A. Quissell	AE-FSO
04/04/05	Jay B. Cobb	SCE-SD
05/07/12	Jay B. Cobb	SCE-SD

TANK SELECTION GUIDE *

Tank Dia.	Gallons	Tank Dia.	Gallons	Tank Dia.	Gallons
6.0 Ft.	353	9.0 Ft.	794	12.0 Ft.	1,412
6.5 Ft.	414	9.5 Ft.	885	12.5 Ft.	1,532
7.0 Ft.	480	10.0 Ft.	981	13.0 Ft.	1,657
7.5 Ft.	552	10.5 Ft.	1,081	13.5 Ft.	1,787
8.0 Ft.	628	11.0 Ft.	1,187	14.0 Ft.	1,922
8.5 Ft.	708	11.5 Ft.	1,297		

** (Based on 20 Inches of Depth)*

TABLE OF QUANTITIES

Item	Unit	Quantity Per Tank (A)	Number of Tanks Planned (B)	Total Quantity For Project (A*B)	As-Built
Used Rubber Tire Casing	*Each*				
Concrete (Sackcrete)	*Bags*				
Bentonite	*Bags*				
2" x 6" Treated Lumber	*Each*				
6" Dia. 6'-0" Long Treated Posts	*Each*				
30" x 2' Concrete Casing with Lid	*Each*				
Frost Free Hydrant	*Each*				
Stop and Drain	*Each*				
PVC Drain	*Feet*				
Animal Escape Ramp	*Each*				

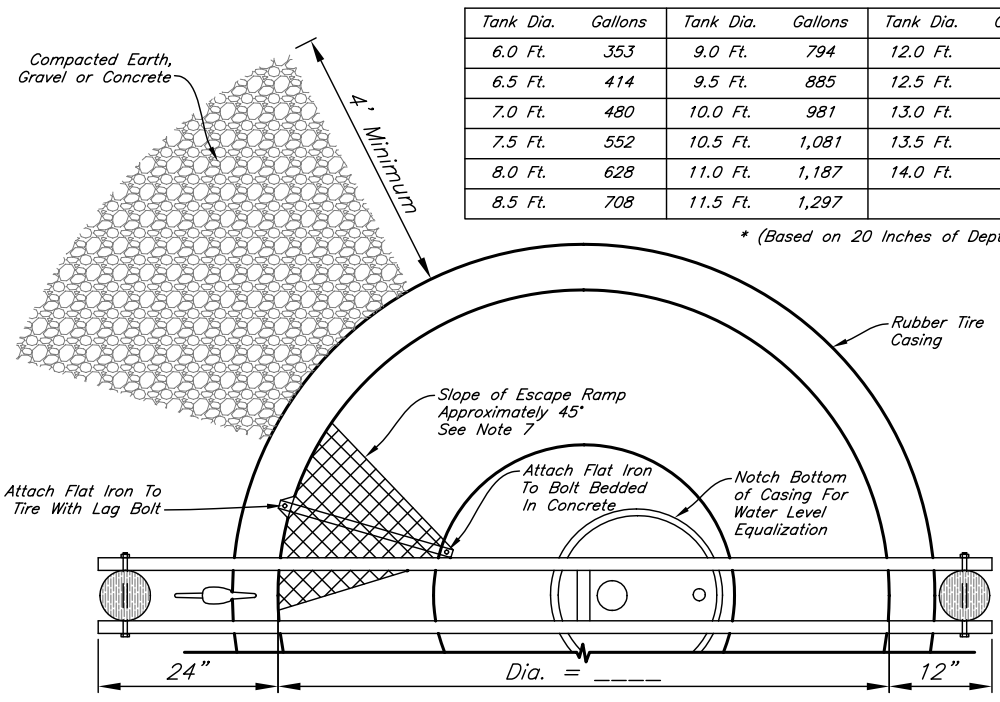

PLAN VIEW

Volumes to Seal Tire Center		
Tank Dia.	*Sackcrete (80 lb. Bags)*	*Bentonite (50 lb. Bags)*
8 Ft.	*16 Bags*	*5 Bags*
10 Ft.	*20 Bags*	*6 Bags*
12 Ft.	*24 Bags*	*7 Bags*

TANK SELECTION		
	Tank Dia.	Gallons
Planned		
"As-Built"		

"As-Built" – Verify that the tank is 20 or more inches deep, measure the inside tank diameter, round to the nearest ½ foot and select the gallons from Tank Selection Guide.

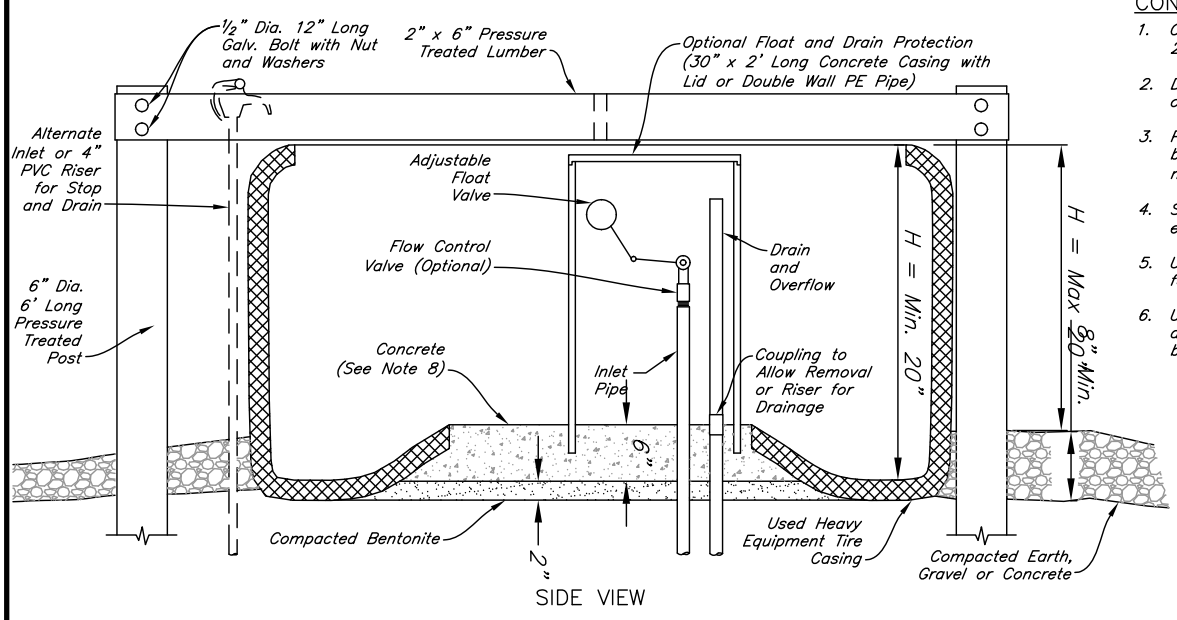

SIDE VIEW

CONSTRUCTION NOTES

1. *Overflow and drain pipe shall be minimum 2" diameter.*
2. *Drain pipe shall be graded to allow drainage of the tank.*
3. *Protect drain pipe at outlet end by backfilling over pipe with field stone, minimum 1 ½" diameter.*
4. *Set bottom of tank approximately 8" below existing ground level.*
5. *Use pre-mixed bags of sackcrete or equal for concrete.*
6. *Used tire casing shall be free of cuts, rips, and holes. Tire casing must not be worn beyond tread depth.*
7. *An animal escape ramp is required in the tank, which will provide a positive means of escape for any bird or animal. See Job Plan 13.1 for details.*
8. *Alternative methods to seal bottom with concrete and bentonite include: ½" thick steel plate, 1" thick rubber (conveyor belt material), or 3/16" thick fiberglass secured to tire bead with lag bolts and caulked with a silicone sealant to insure a good water tight seal.*
9. *A 4" PVC riser with cap shall be used for a stop and drain.*
10. *Hydrant or float and overflow must be protected by one of the shown protection systems or an approved alternative.*

STATEMENT OF COMPLIANCE

Construction (was) (was not) completed in accordance with approved construction plans and specifications.

_____
JAA Date

USED HEAVY EQUIPMENT TIRE CASING STOCKWATER TANK WITH BENTONITE AND CONCRETE BOTTOM

JOB PLAN 14.5C REV. 05/2012

TANK SELECTION		
DATE	APPROVED	TITLE
09/07/2005	Jay B. Cobb	SCE-SD
04/01/2008	Jay B. Cobb	SCE-SD
05/07/2012	Jay B. Cobb	SCE-SD

5/7/12 11:32 AM
Sheet of
Drawing No. ----
File No. Tanks_2012.dwg

NRCS
Natural Resources Conservation Service
United States Department of Agriculture

NAME: _____
WATERING FACILITY
Round Fiberglass Stockwater Tank
Sec. ____, T. ____, R. ____ _____ County, South Dakota

Date
Designed _____ _____
Drawn _____ _____
Checked _____ _____
Approved _____ _____