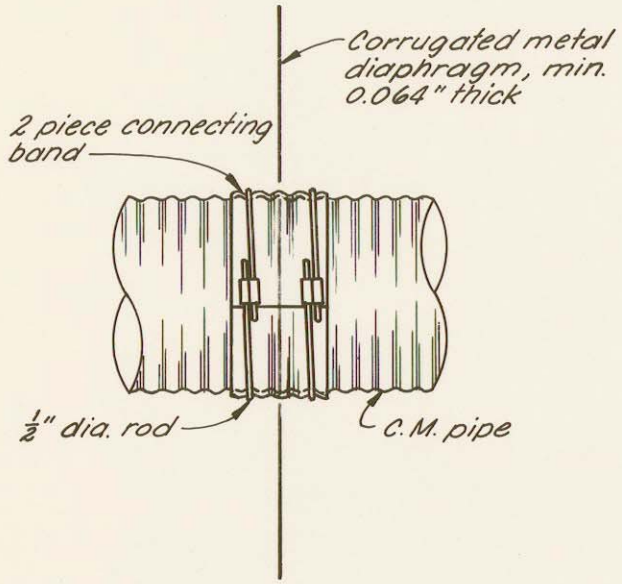

SECTION A-A

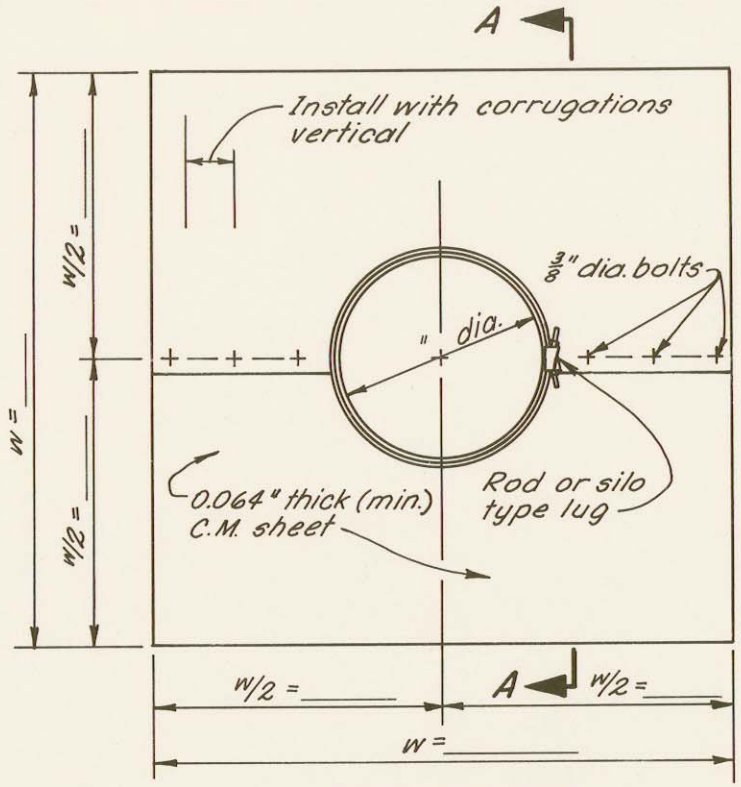

ELEVATION

NOTES:

1. WATERTIGHTNESS WILL BE OBTAINED BY USE OF (1) 3/8" THICK NEOPRENE GASKET (WIDTH AS SHOWN) OR (2) ASPHALT MASTIC SEALING MATERIAL TO COVER FULL WIDTH OF BAND. CROSS OUT TYPE NOT USED ON DIMENSIONS AND QUANTITIES.
2. WELD BAND TO LOWER SHEET WITH CONTINUOUS WELD AROUND TO 2" BELOW CENTERLINE. WELD BAND TO UPPER SHEET WITH CONTINUOUS WELD AROUND TO CENTERLINE.
3. ALL DAMAGED GALVANIZING AND UNGALVANIZED METAL SHALL BE CLEANED AND PAINTED WITH TWO COATS OF ZINC DUST, ZINC OXIDE PRIMER (FED. SPEC. TT-P-641 TYPE III).

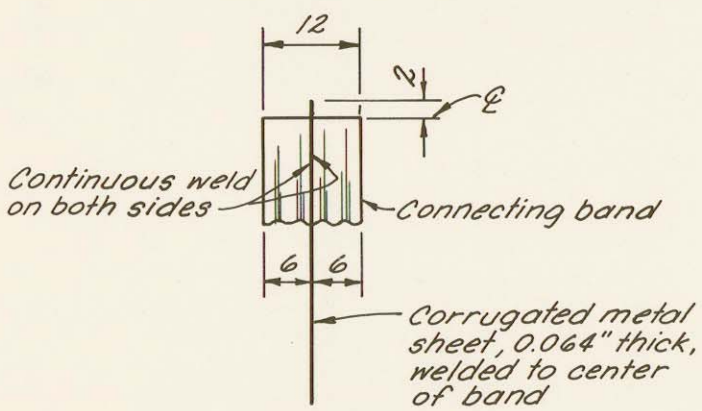

SECTION B-B

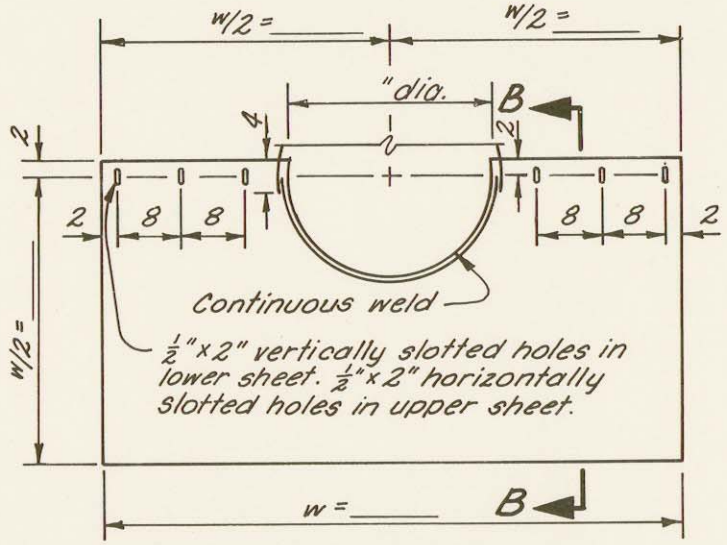

HALF ELEVATION

DIMENSIONS AND QUANTITIES

PIPE DIAMETER IN INCHES	12	15	18	21	24	30	36	42	48
"W" IN INCHES	60	63	66	69	72	90	96	102	108
NO. OF RODS AND LUGS	2	2	2	2	2	2	2	2	2
NEOPRENE GASKET WIDTH IN INCHES	12	12	12	12	12	12	12	12	12
ASPHALT MASTIC IN GALS.	1/2	1/2	1/2	1	1	1	1 1/2	1 1/2	1 1/2

JOB PLAN NO. 3.1

TWO PIECE C.M. DIAPHRAGM (ROD TYPE)

OPERATOR: _____

CONSERVATION DISTRICT: _____

U. S. DEPARTMENT OF AGRICULTURE
SOIL CONSERVATION SERVICE

	Date		
Designed		Approved by	
		Title	
Drawn		Title	
Traced		Sheet No. of	Drawing No.
Checked			

USDA-SCS-LINCOLN, NEBR. 1974

5, N-29, 073.3-1a