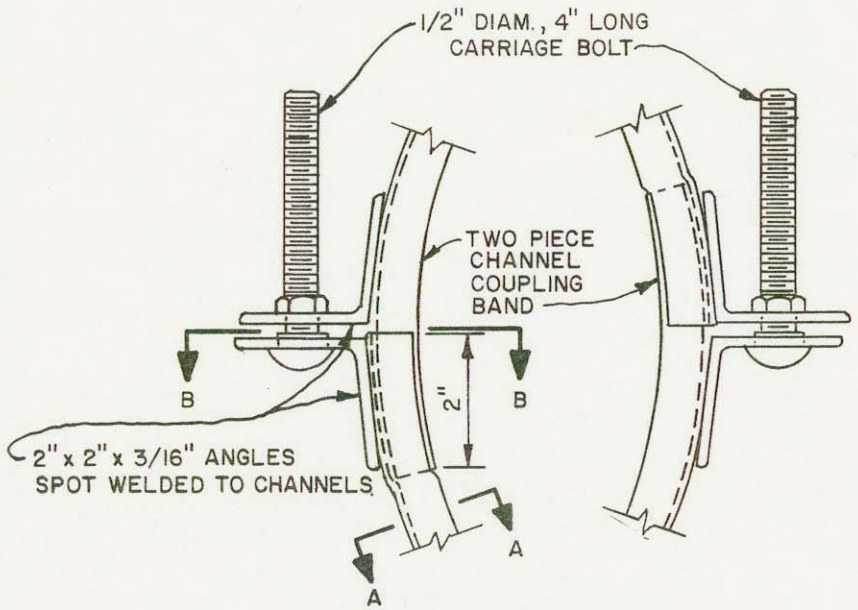

PARTIAL END VIEW

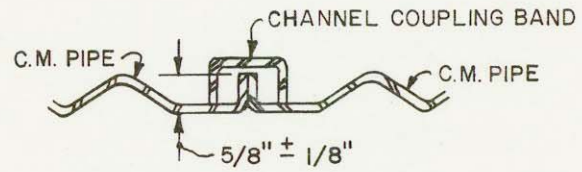

SECTION A–A
NOTE: SEALING COMPOUND
NOT SHOWN.

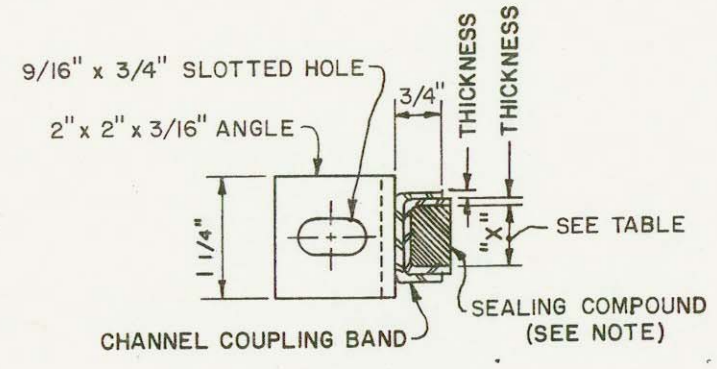

SECTION B-B

TABLE OF NOMINAL DIMENSION		
CHANNEL THICKNESS	DIMENSION "X"	CORRUGATED STEEL PIPE THICKNESS
0.079"	3/4"	0.109" OR LIGHTER
0.109"	1"	0.138" OR HEAVIER

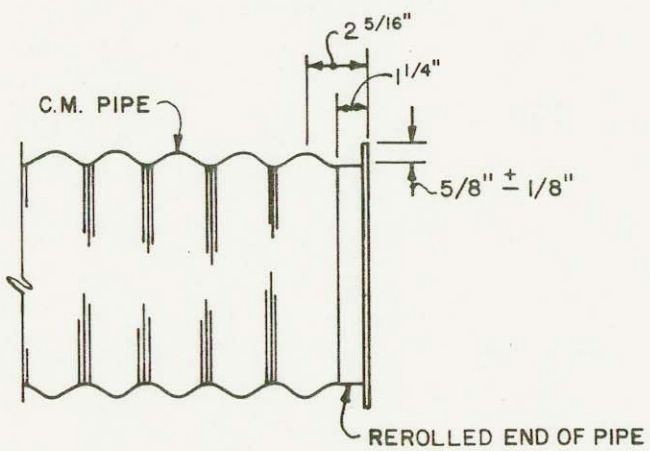

PIPE DETAIL

NOTES:

1. SEALING COMPOUND SHALL BE RAM-NEK JOINT SEALING COMPOUND AS MANUFACTURED BY K. T. SNYDER COMPANY INC., HOUSTON, TEXAS OR EQUAL.
2. PIPE COATINGS DAMAGED DURING REROLLING THE ENDS OF THE PIPE SHALL BE REPAIRED IN ACCORDANCE WITH SECTION 15.4 OF SOUTH DAKOTA CONSTRUCTION SPECIFICATION SD-15.

JOB PLAN NO. 3.7

DETAILS OF TWO PIECE CHANNEL COUPLING BAND

OPERATOR: _____

CONSERVATION DISTRICT: _____

U. S. DEPARTMENT OF AGRICULTURE
SOIL CONSERVATION SERVICE

	Date		
Designed		Approved by	
		Title	
Drawn			
		Title	
Traced		Sheet No	Drawing No.
Checked		of	