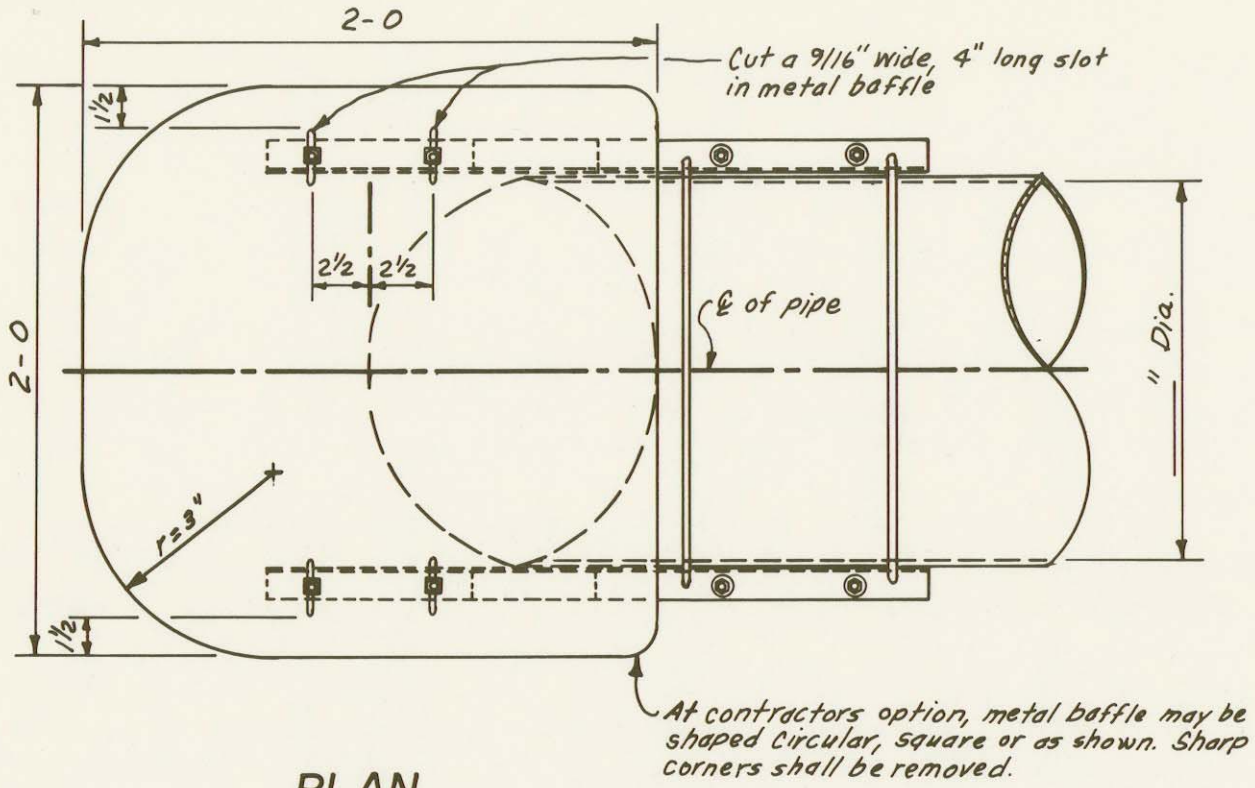

PLAN

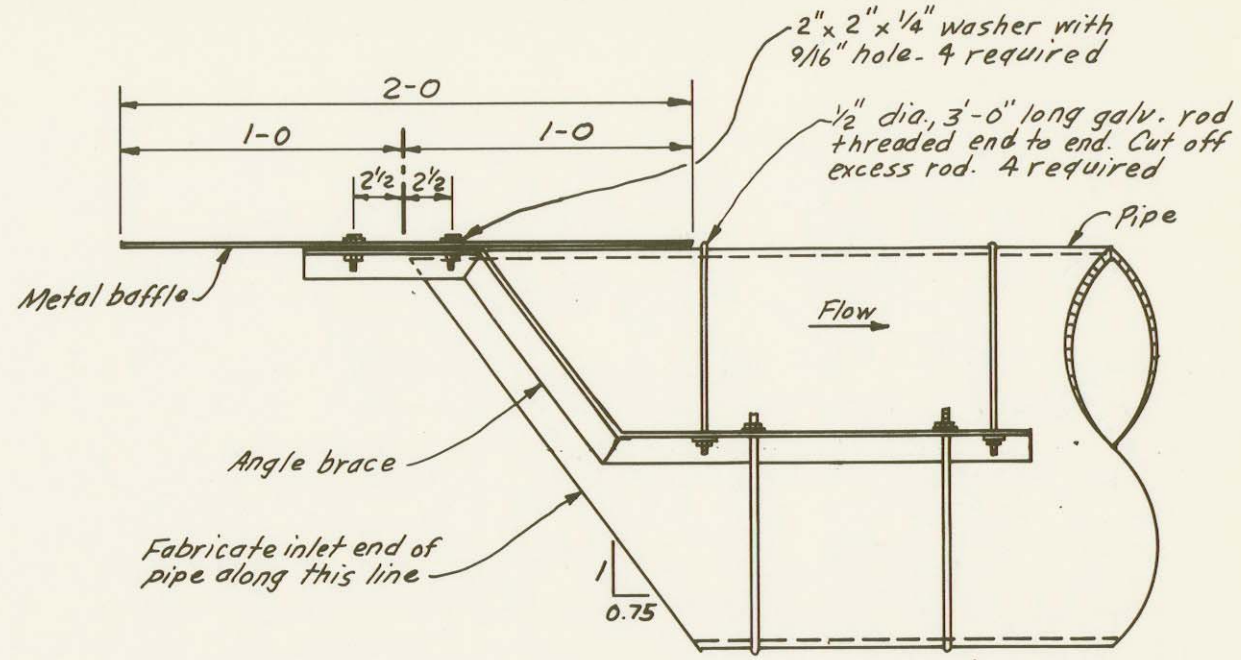

SIDE ELEVATION

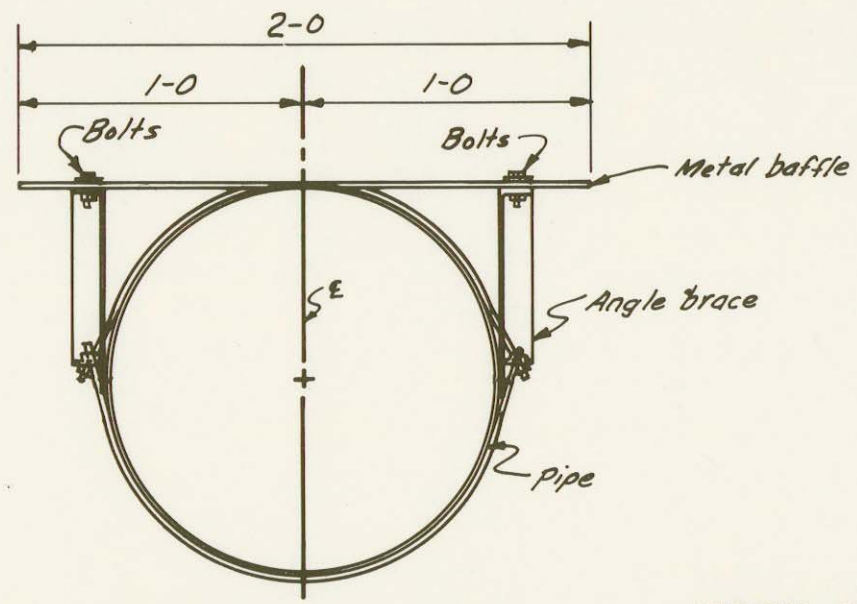

FRONT ELEVATION

TABLE OF QUANTITIES

ITEM	UNIT	QUANTITY
STEEL BAFFLE, 1/4" THICK (GALV.)	SQ. FT.	3
1/2" DIA. GALV. ROD	EACH	4
2" x 2" x 1/4" GALV. ANGLE	LBS.	28
1/2" DIA. x 1 1/2" LONG GALV. BOLT	EACH	4

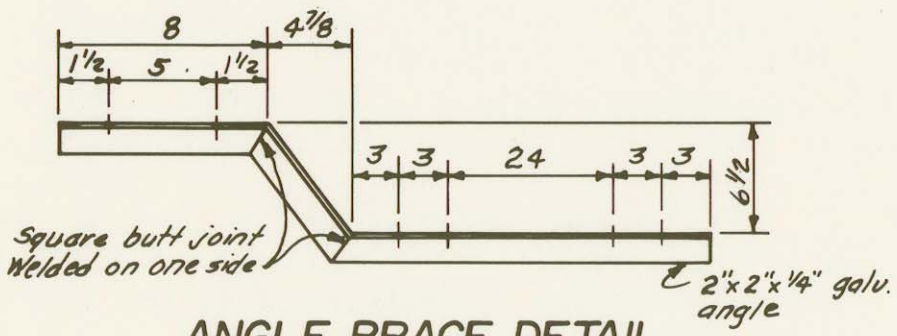

ANGLE BRACE DETAIL
(1 left and 1 right required)

NOTES:
1. ALL BOLTS AND RODS SHALL HAVE A NUT AND SPLIT WASHER.
2. ALL STRUCTURAL STEEL SHALL BE GALVANIZED.
3. ALL DRILL HOLES SHALL BE 9/16"
4. BAFFLE WILL FIT 11 1/2" TO 18 1/2" O.D. PIPE BUT BAFFLE SIZE IS ADEQUATE ONLY FOR 16" OR SMALLER I.D. PIPE.

JOB PLAN NO. 6.3

HOOD INLET AND BAFFLE FOR 12" THRU 16" I.D. PIPE

OPERATOR: _____

CONSERVATION DISTRICT: _____

U. S. DEPARTMENT OF AGRICULTURE
SOIL CONSERVATION SERVICE

	Date		
Designed		Approved by	
Drawn		Title	
Traced		Title	
Checked		Sheet No of	Drawing No.