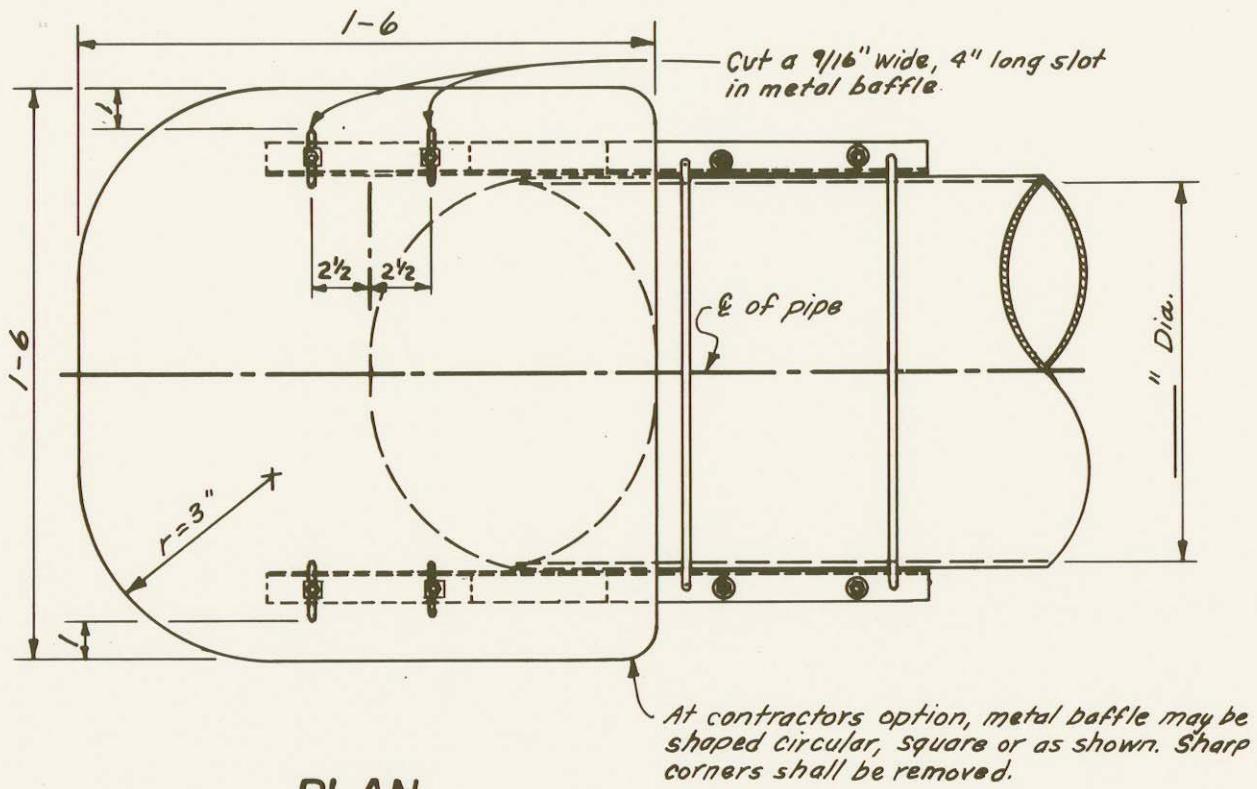

PLAN

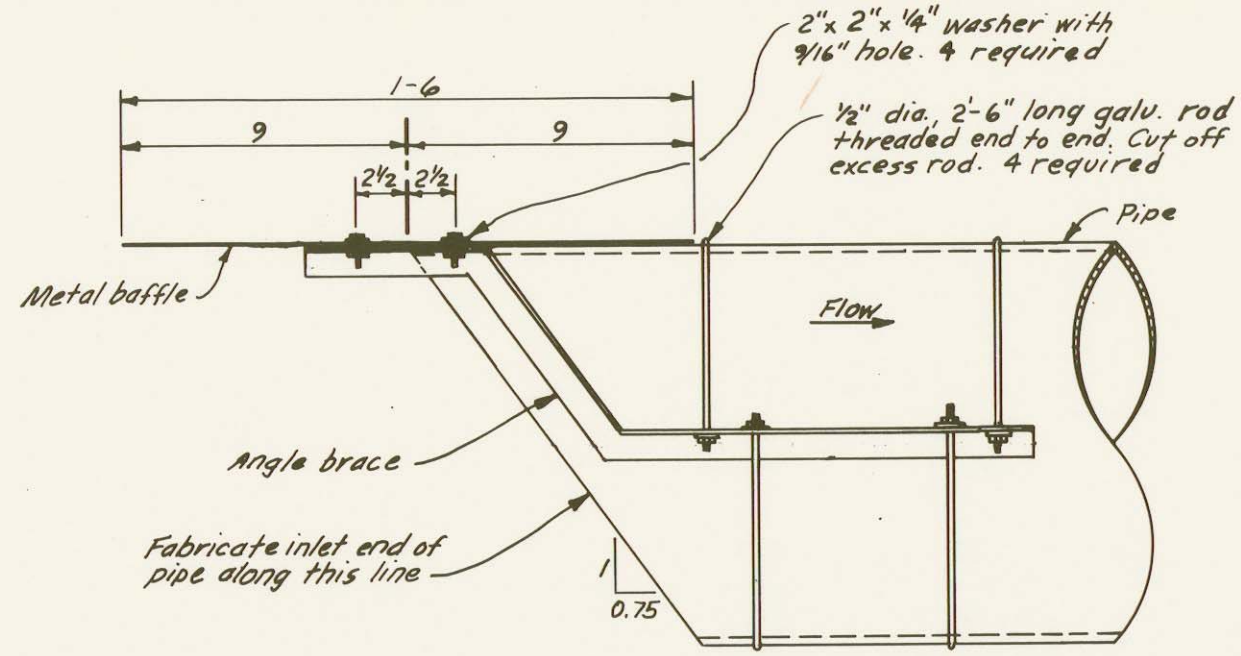

SIDE ELEVATION

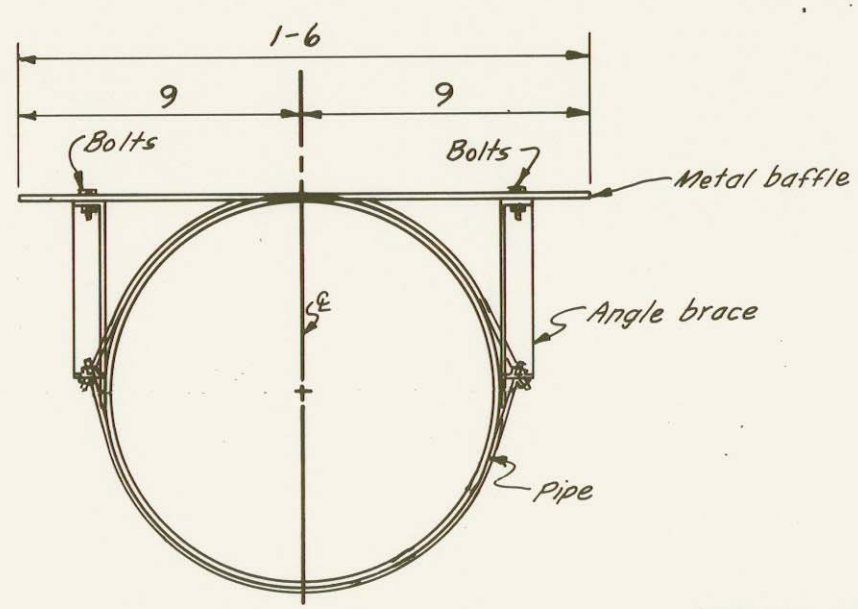

FRONT ELEVATION

TABLE OF QUANTITIES

ITEM	UNIT	QUANTITY
STEEL BAFFLE, 1/4" THICK (GALV.)	SQ. FT.	2
1/2" DIA. GALV. ROD	EACH	4
1 1/2" x 1 1/2" x 1/4" GALV. ANGLE	LBS.	14
1/2" DIA. x 1 1/2" LONG GALV. BOLT	EACH	4

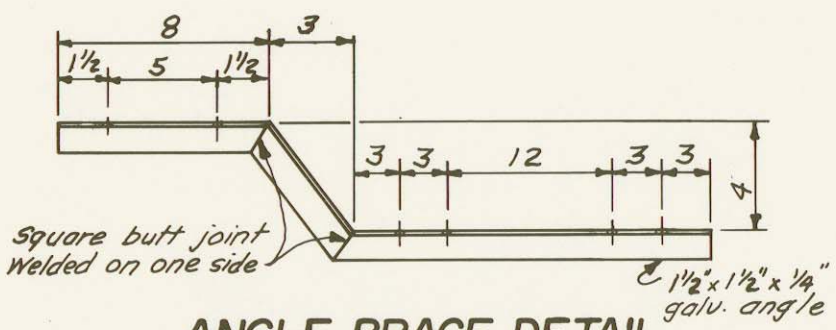

ANGLE BRACE DETAIL
(1 left and 1 right required)

NOTES:
1. ALL BOLTS AND ROD SHALL HAVE A NUT AND SPLIT WASHER.
2. ALL STRUCTURAL STEEL SHALL BE GALVANIZED.
3. ALL DRILL HOLES SHALL BE 9/16".
4. BAFFLE WILL FIT 7" TO 14" O.D. PIPE, BUT BAFFLE SIZE IS ADEQUATE ONLY FOR 12" OR SMALLER I.D. PIPE.

JOB PLAN NO. 6.2

HOOD INLET AND BAFFLE FOR 8" THRU 12" I.D. PIPE

OPERATOR _____

CONSERVATION DISTRICT: _____

U. S. DEPARTMENT OF AGRICULTURE
SOIL CONSERVATION SERVICE

	Date		
Designed		Approved by	
		Title	
Drawn		Title	
Traced		Sheet No. of	Drawing No.
Checked			