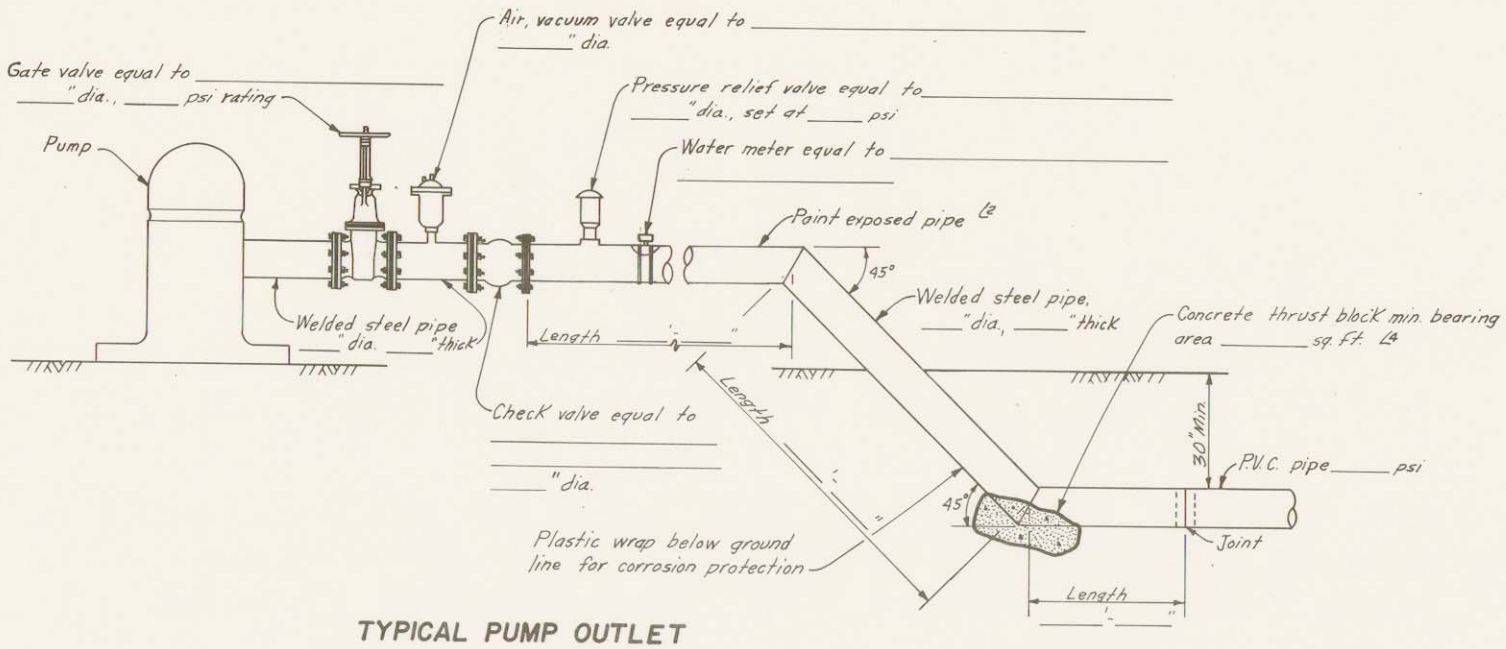

TYPICAL PUMP OUTLET

(Not to scale)

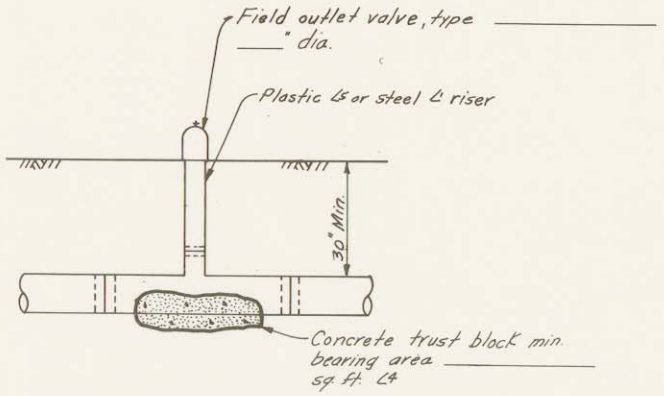

TYPICAL FIELD OUTLET

(Not to scale)

NOTES:

1. UNDERGROUND COATING FOR WELDED STEEL PIPE SHALL CONFORM TO AWWA SPECIFICATION C203 OR BE COATED WITH PIPE PRIMER OR EQUIVALENT AND WRAPPED WITH SCOTCHRAP TAPE NO. 40 OR 43 OR EQUAL. COATING OR WRAP SHALL BE INSTALLED PRIOR TO POURING THRUST BLOCKS.
2. SEE SD-21 FOR PAINT SPECIFICATION FOR EXPOSED STEEL PIPE.
3. ALL FITTINGS AND APPURTENANCES MUST HAVE A PRESSURE RATING EQUAL TO OR EXCEEDING THE HIGHEST PRESSURE EXPECTED AT THAT POINT.
4. CONCRETE THRUST BLOCKS SHALL BE POURED AGAINST ORIGINAL OR COMPACTED TRENCH SOILS TO THE FULL BEARING AREA EQUALLY DISTRIBUTED ON EACH SIDE OF THE JOINT BEING PROTECTED. FOR NONREINFORCED THRUST BLOCKS, BEARING SHALL NOT BE CONSIDERED MORE THAN 6 INCHES BEYOND PROJECTED SIDES OF THE PIPE.
5. PROTECT ALL EXPOSED PLASTIC PIPE FROM ULTRAVIOLET RAYS OF SUN BY EITHER (A) SHIELDING PIPE FROM THE SUN OR (B) PAINTING PIPE WITH 3 COATS OF HEAVY DUTY EXTERIOR LATEX PAINT OR (C) USING ULTRAVIOLET RESISTANT PIPE (FOLLOWING MANUFACTURERS RECOMMENDATIONS).

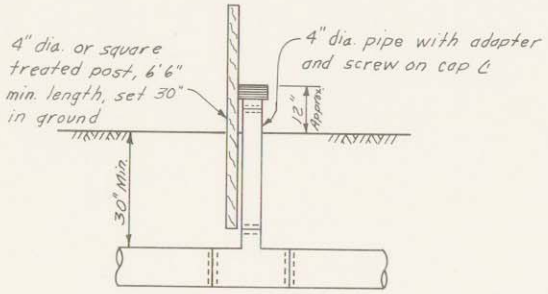

PUMP-OUT DETAILS

(Not to scale)

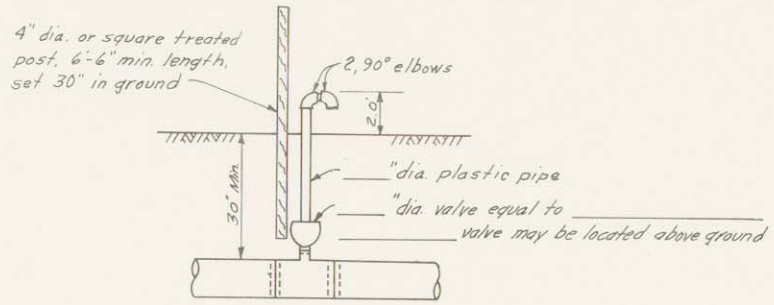

AIR RELEASE OR COMBINATION AIR RELEASE AND VACUUM VALVE

(Not to scale)

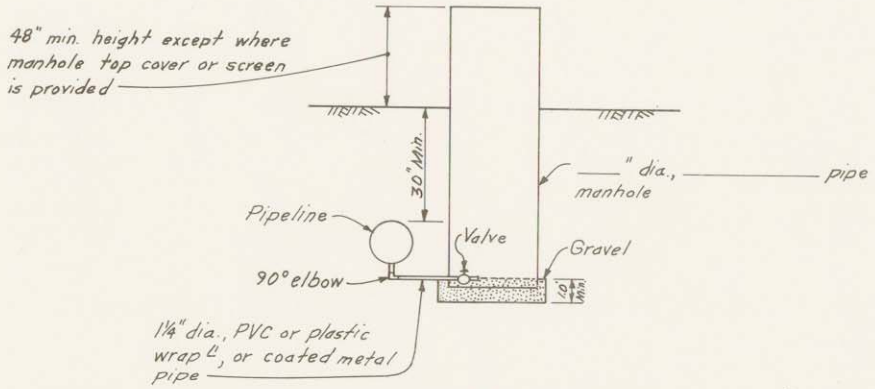

MANHOLE AND DRAIN DETAIL

(Not to scale)

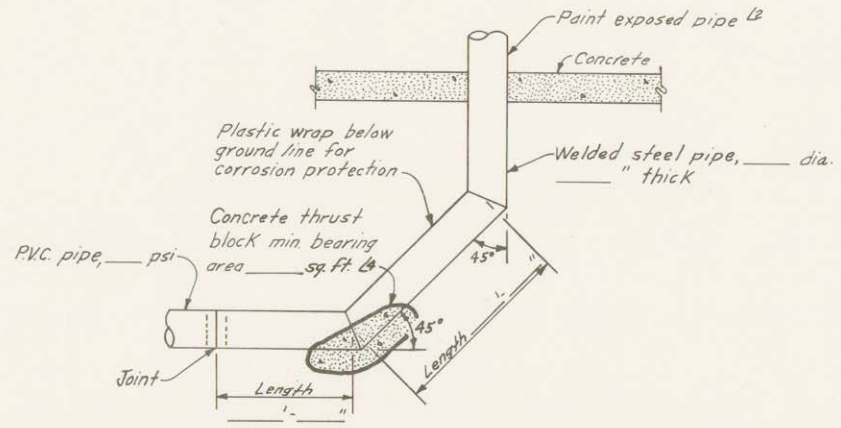

TYPICAL PIVOT POINT

(Not to scale)

JOB PLAN NO. 11.0

IRRIGATION PIPELINE APPURTENANCES

OPERATOR:

CONSERVATION DISTRICT:

U. S. DEPARTMENT OF AGRICULTURE
SOIL CONSERVATION SERVICE

	Date		
Designed		Approved by	
		Title	
Drawn			
		Title	
Traced		Sheet No	Drawing No.
Checked		of	