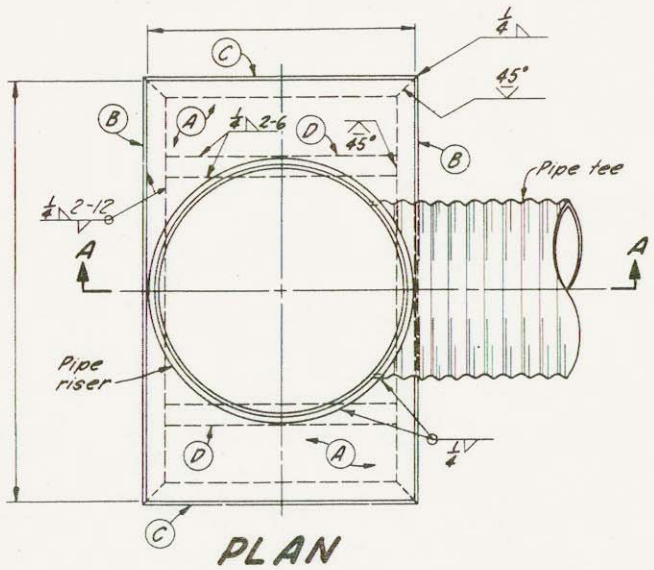

PLAN

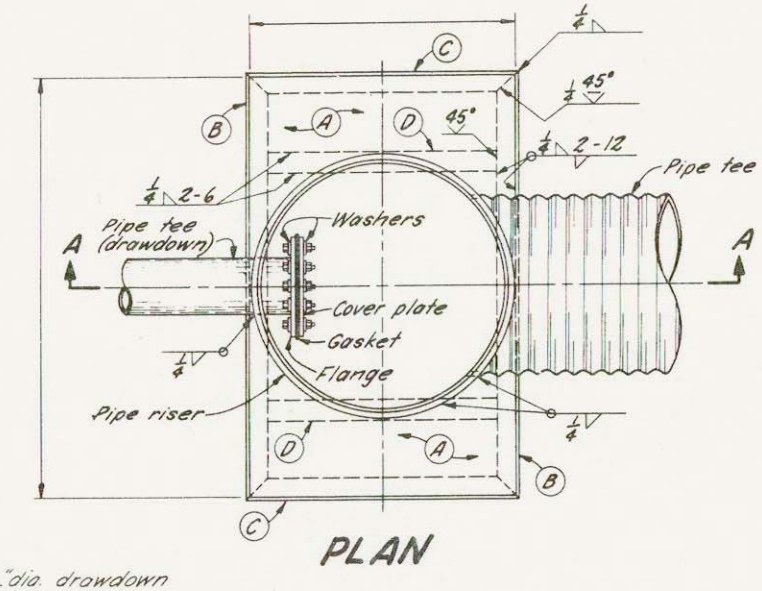

PLAN

Use a $\frac{1}{2}$" standard flange on ____"dia. drawdown pipe. Provide a $\frac{1}{4}$" thick steel plate, same dia. as flange with holes drilled to match holes in flange. Provide rubber gasket to fit between flange and plate. Fasten plate to flange with 8-$\frac{1}{2}$"x$1\frac{1}{2}$" galvanized bolts, nuts and washers

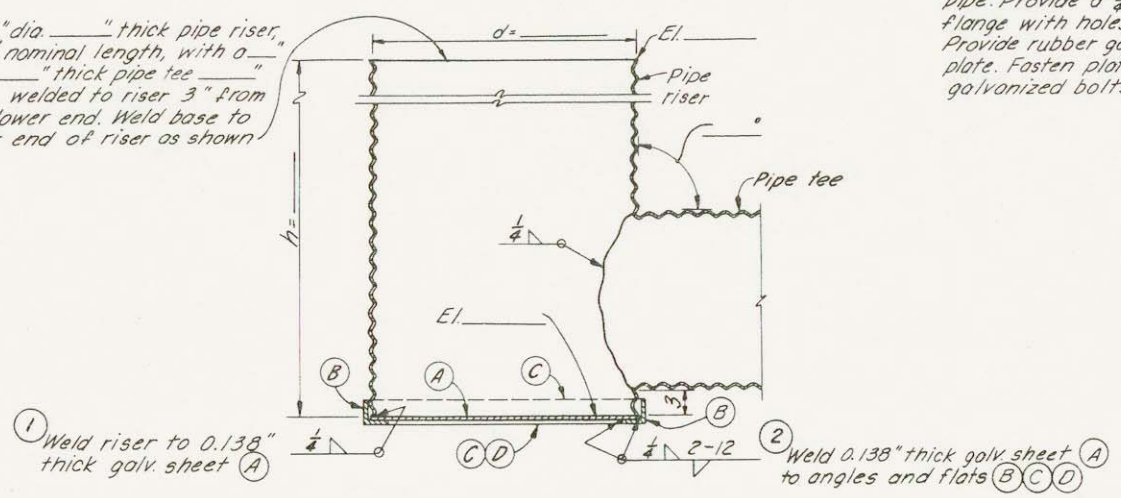

SECTIONAL ELEVATION A-A
TYPE A

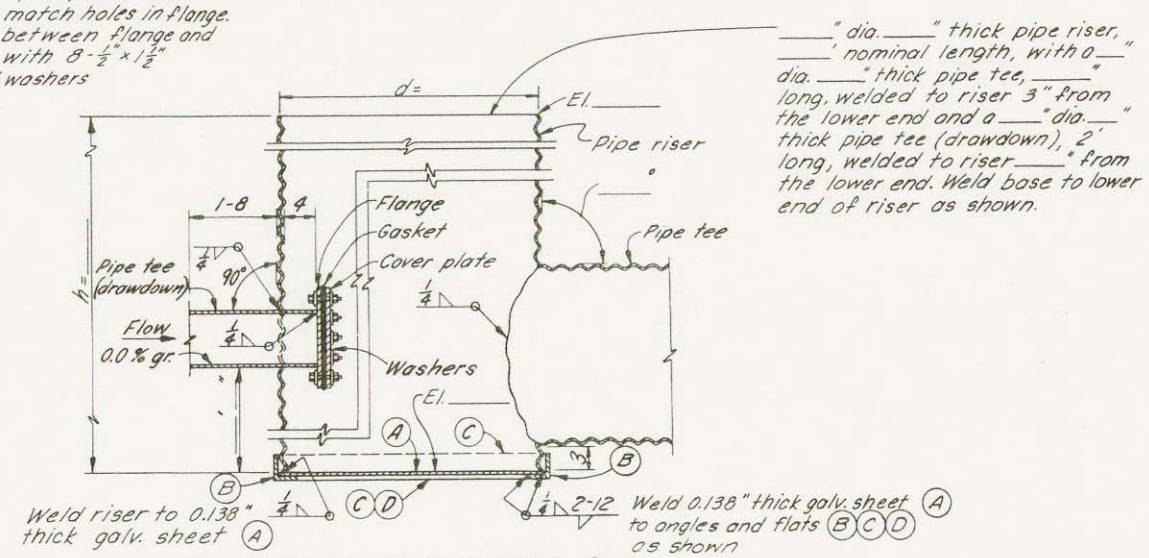

SECTIONAL ELEVATION A-A
TYPE B

NOTES:

1. ALL ANGLES AND SHEETS TO BE SECURELY WELDED AS SHOWN ON THE PLANS IN ACCORDANCE WITH SPECIFICATIONS.
2. ALL WELDS AND HEAT AFFECTED AREAS ON GALVANIZED METAL TO BE TREATED IN ACCORDANCE WITH SPECIFICATIONS.

MATERIAL LIST FOR RISER BASE

MARK	ITEM	LENGTH	QUANTITY
A	0.138" THICK GALV. METAL SHEET		1
B	ANGLES 3" X 3" X 1/4"		2
C	ANGLES 3" X 3" X 1/4"		2
D	FLAT BAR, 3" X 1/4"		2

TABLE OF QUANTITIES

ITEM	UNIT	QUANTITY
0.138" THICK GALV. METAL SHEET	LB.	
STRUCTURAL STEEL	LB.	
TOTAL WT. STEEL BASE	LB.	

REFERENCE: GUIDE PLAN NO. 5.0

JOB PLAN NO. 5.0

METAL BASE PIPE RISER

OPERATOR: _____

CONSERVATION DISTRICT: _____

U. S. DEPARTMENT OF AGRICULTURE
SOIL CONSERVATION SERVICE

	Date		
Designed		Approved by	
		Title	
Drawn		Title	
Traced		Sheet No. of	Drawing No.
Checked			

5, N-29,073.5a