STEEL SCHEDULE AND CONCRETE QUANTITIES

RISER DIA. IN.	BARREL DIA. IN.	BAR SIZE	MARK	TYPE	NO. REQ'D.	LENGTH FT.-IN.	TOTAL LENGTH FT.-IN.	TOTAL WT. LB.	CONC. CU. YD.	C IN.	L FT.-IN.
30	12	4	1	STR.	10	4-0	40-0	27	0.8	3	4-6
42	15	4	1	STR.	12	5-0	60-0	40	1.1	3	5-6
48	18	4	1	STR.	12	5-6	66-0	44	1.3	6	6-0
54	21	4	1	STR.	14	6-0	84-0	56	1.6	3	6-6
60	24	4	1	STR.	14	6-6	91-0	61	1.9	6	7-0

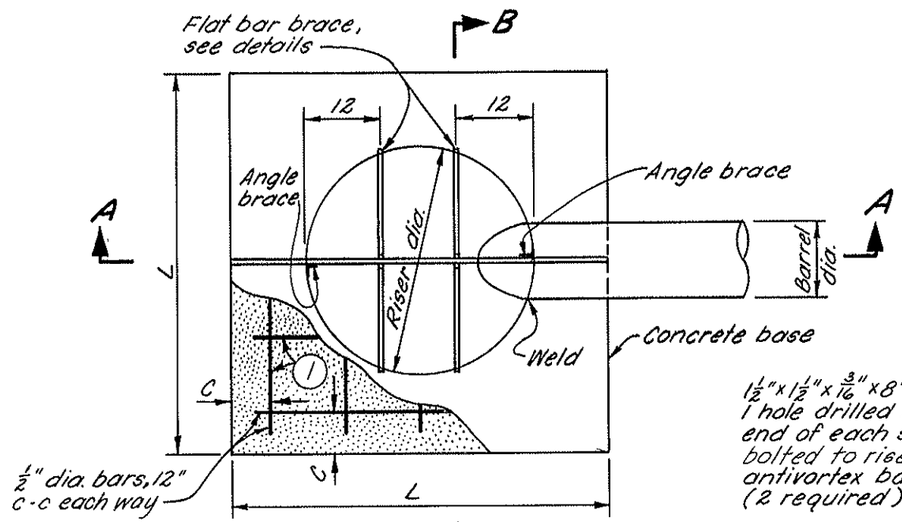

PLAN VIEW

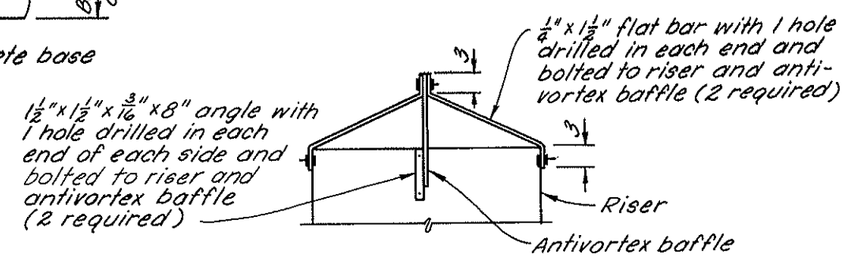

SECTIONAL ELEVATION B-B

THICKNESS AND GAGE OF PIPE

PIPE DIA. INCHES	GAGE	THICKNESS INCHES
12-21	16	0.064
24-30	14	0.079
36-42	12	0.109
48-60	10	0.138

STRUCTURAL STEEL AND ANTIVORTEX BAFFLE QUANTITIES

RISER DIA. IN.	D IN.	N IN.	O FT.-IN.	BAFFLE AREA SQ. FT.	BAFFLE WT. LB.	1/4" X 1 1/2" FLAT BAR LENGTH, FT.-IN.	NO. REQ'D.	FLAT BAR WT. LB.	1 1/2" X 1 1/2" X 3/16" ANGLE INCHES	NO. REQ'D.	ANGLE WT. LB.
30	12	9	4-6	6	34	2-0	4	11	8	2	2.4
42	15	11 1/4	6-0	9	51	2-8	4	14	8	2	2.4
48	18	13 1/2	7-0	13	73	2-10	4	15	8	2	2.4
54	21	15 3/4	8-0	16	90	3-4	4	17	8	2	2.4
60	24	18	9-0	21	118	3-7	4	18	8	2	2.4

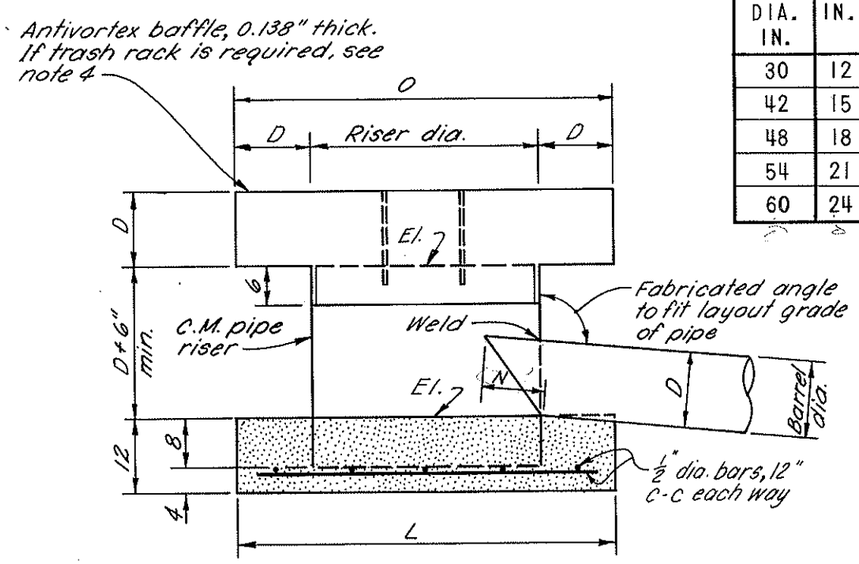

SECTIONAL ELEVATION A-A

NOTES:

1. ALL GALVANIZING DAMAGED BY CUTTING, DRILLING, OR WELDING SHALL BE REPAIRED BY PAINTING WITH TWO COATS OF ZINC DUST – ZINC OXIDE PRIMER.
2. FOR TRASH RACK AND BAFFLE DETAILS, SEE PLAN SERIES 6.
3. ALL BOLTS SHALL HAVE NUT AND SPLIT WASHER.
4. ALL NUTS, BOLTS, AND WASHERS SHALL BE GALVANIZED, CADMIUM PLATED, OR STAINLESS STEEL.
5. HOLES IN BRACES SHALL BE SPACED AND LOCATED TO MATCH CORRUGATIONS IN PIPE AND BAFFLE.
6. SELECT DIMENSIONS FOR PROPER SIZE AND TRANSFER TO JOB PLAN.
7. ALL CUTS SHALL BE SAW OR SHEAR CUTS.

RISER AND HOOD INLET COMBINATION

SOUTH DAKOTA GUIDE PLAN NO. 5.4

U. S. DEPARTMENT OF AGRICULTURE
SOIL CONSERVATION SERVICE

Designed D.M., D.H. Date 7-70
Drawn
Traced
Checked
Approved by
Title
Title
Sheet No 1 of 1
Drawing No.

5,N-29,073.5-4