Print Form

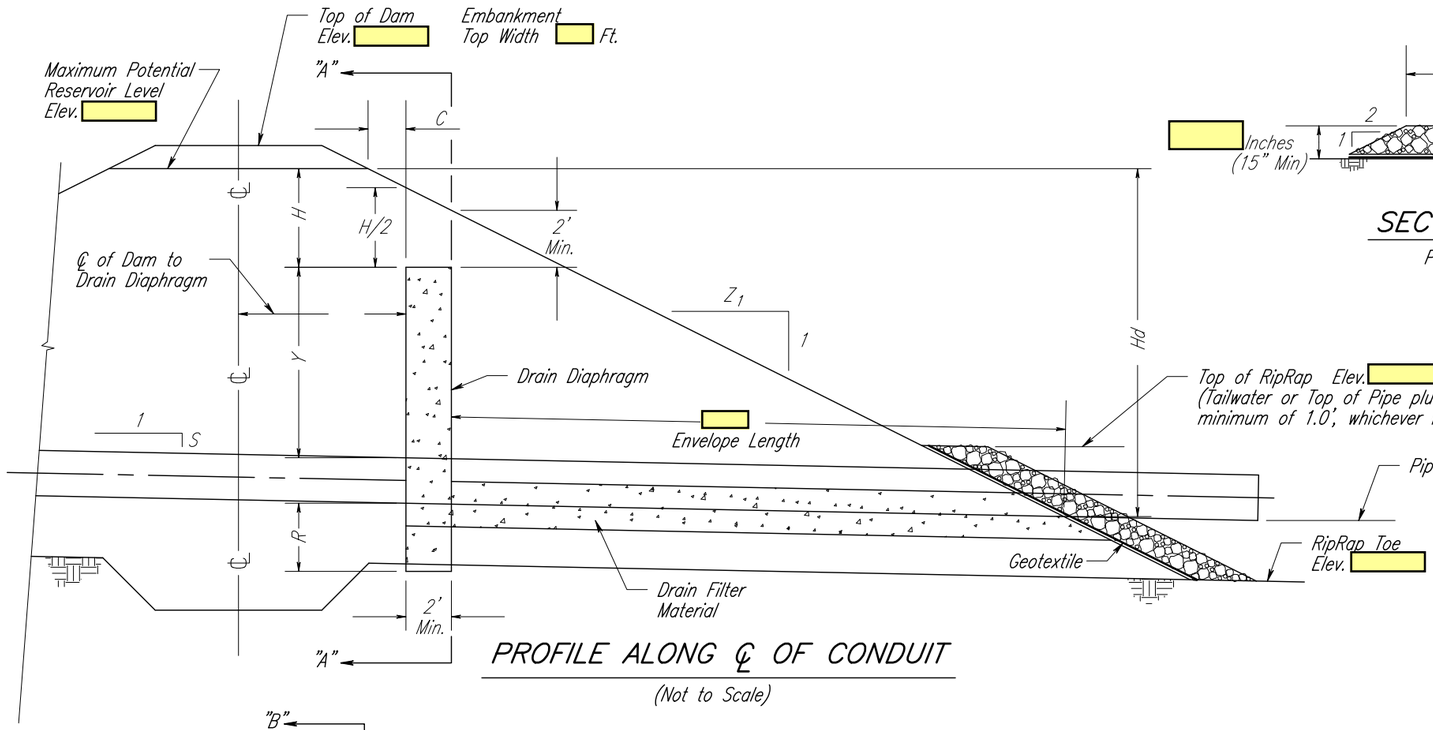

PROFILE ALONG ℄ OF CONDUIT

(Not to Scale)

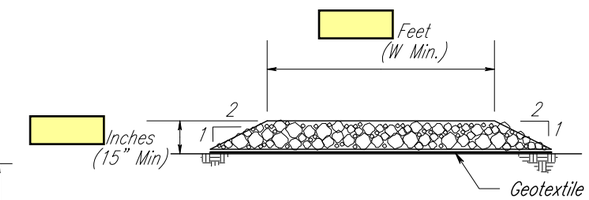

SECTION OF RIPRAP

Perpendicular to Slope

SUMMARY OF DESIGN AND DIMENSIONS

DESIGN DATA

H = ____ Feet Hd = ____ Feet
X = ____ Feet D = ____ Inches
R = ____ Feet Y = ____ Feet
C = ____ Feet Aggregate Gradation # 1
Embankment Backslope (Z1) = ____ Pipe Slope (S) ____ Ft./Ft.

DIMENSIONS

W = ____ Feet (Total Width of Drain Diaphragm)
T = ____ Feet (Total Height of Drain Diaphragm)
t = ____ Feet (Thickness of Single Filter)

ESTIMATED QUANTITIES

Drain Filter Material ____ Cubic Yards
Geotextile ____ Square Yards
Rock Riprap ____ Cubic Yards

DRAIN FILTER MATERIAL GRADATION #1

SIEVE SIZE	PERCENT PASSING
3/8	100
#4	95–100
#8	80–100
#16	50–85
#30	25–60
#50	5–30
#100	0–10

ASTM C–#33 FINE CONCRETE AGGREGATE GRADATION

DRAIN FILTER MATERIAL GRADATION #2

SIEVE SIZE	PERCENT PASSING
#4	100
#8	95–100
#16	70–100
#30	40–75
#50	10–35
#100	2–15
#200	0–5

ASTM C–#144 MASONRY MORTAR AGGREGATE GRADATION

ROCK RIPRAP GRADATION

PERCENT SMALLER	WEIGHT RANGE (LBS.)	AVERAGE CUBIC DIMENSION
100	50 lb.	10"
50–80	30 lb.	7"
15–50	10 lb.	5"
0–15	3 lb.	3"

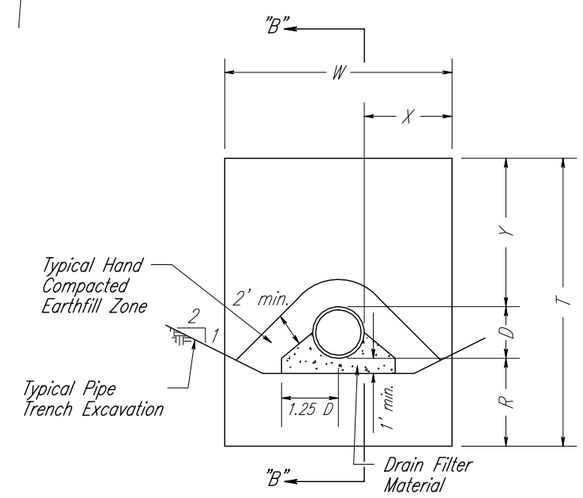

SECTION A–A

(Not to Scale)

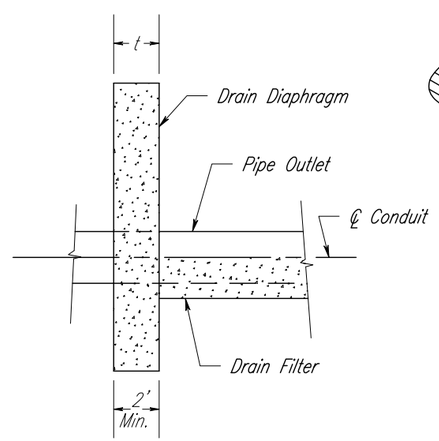

SECTION B–B

(Not to Scale)

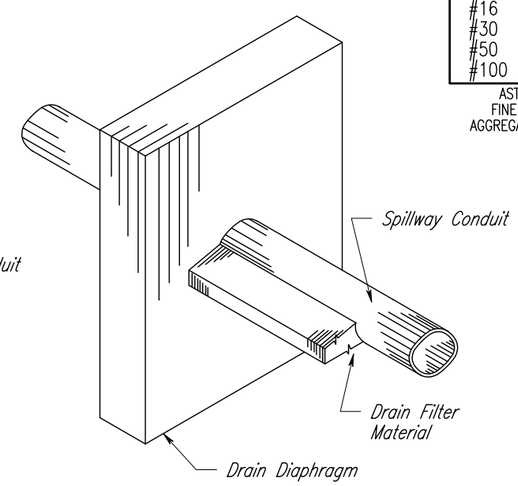

PARTIAL ISOMETRIC

CONSTRUCTION NOTES

1.) The Drainage Diaphragm and envelope will be installed by placing Drain Filter Material in maximum 15 inch thick uncompacted lifts. Each lift will be saturated uniformly with approximately 1.2 gallons of water per cubic foot of loose Drain Filter Material prior to compaction. Each lift will then be compacted by a minimum of two passes of a hand-directed vibratory compactor over the entire lift surface. No compaction of the drain envelope above the pipe invert will be required.
2.) The maximum height of drop of the Riprap onto the Geotextile in the pipe outlet area shall be 3 feet.

MATERIAL NOTES

1.) The Geotextile shall conform to the Class I requirements specified in Table 2 for Nonwoven Geotextiles in Material Specification SD–592.
2.) Select Drain Filter Material Gradation #1 for base soils classified as CL and Gradation #2 for base soils classified as CH under the Unified Soil Classification System.

DEFINITIONS

D = Outside diameter of circular conduit.
H = Vertical distance between the Top of Diaphragm and the Maximum Potential Reservoir Level.
X = Use the smaller of 3 X D or 5 feet beyond any excavation made to install conduit.
Y = Vertical distance from Top of Conduit to Top of Diaphragm Y = 3 X D or no higher than Maximum Potential Reservoir Level
C = Horizontal distance from D.S. face of Embankment at Maximum Potential Reservoir Level to U.S face of Diaphragm.
R = 1.5' or 1.0' beyond excavation, not to extend beyond a bedrock surface.
Hd = Vertical distance from Maximum Potential Reservoir Level to Conduit Invert at D.S. face of Embankment Slope.
S = Slope of Conduit in feet of fall per horizontal foot.

$$C = Hd \times Z_1 - \frac{((1.5 \times D) + (Hd / 2))}{(1 / Z_1) - (S / 2)} > 0 \quad (\text{Maximum})$$

DRAINAGE DIAPHRAGM DETAILS

GUIDE PLAN 3.8 (07/2009)

REVISIONS		
DATE	APPROVED	TITLE
07/31/2009	Jay B. Cobb	State Conservation Engineer

Date
Designed
Drawn
Checked
Approved

PRODUCER ____ SECTION ____ T. ____ R. ____ COUNTY ____ CONSERVATION DISTRICT ____

USDA – NRCS
State Office Engineering Staff
200 Fourth Street SW
Huron, South Dakota 57350

NRCS
Natural Resources Conservation Service
United States Department of Agriculture

File Name:
SD_IdaPlan_Drainage Diaphragm378_07_09v3.pro

Drawing No.

7/21/2009 2:21PM

Sheet 1 of 1

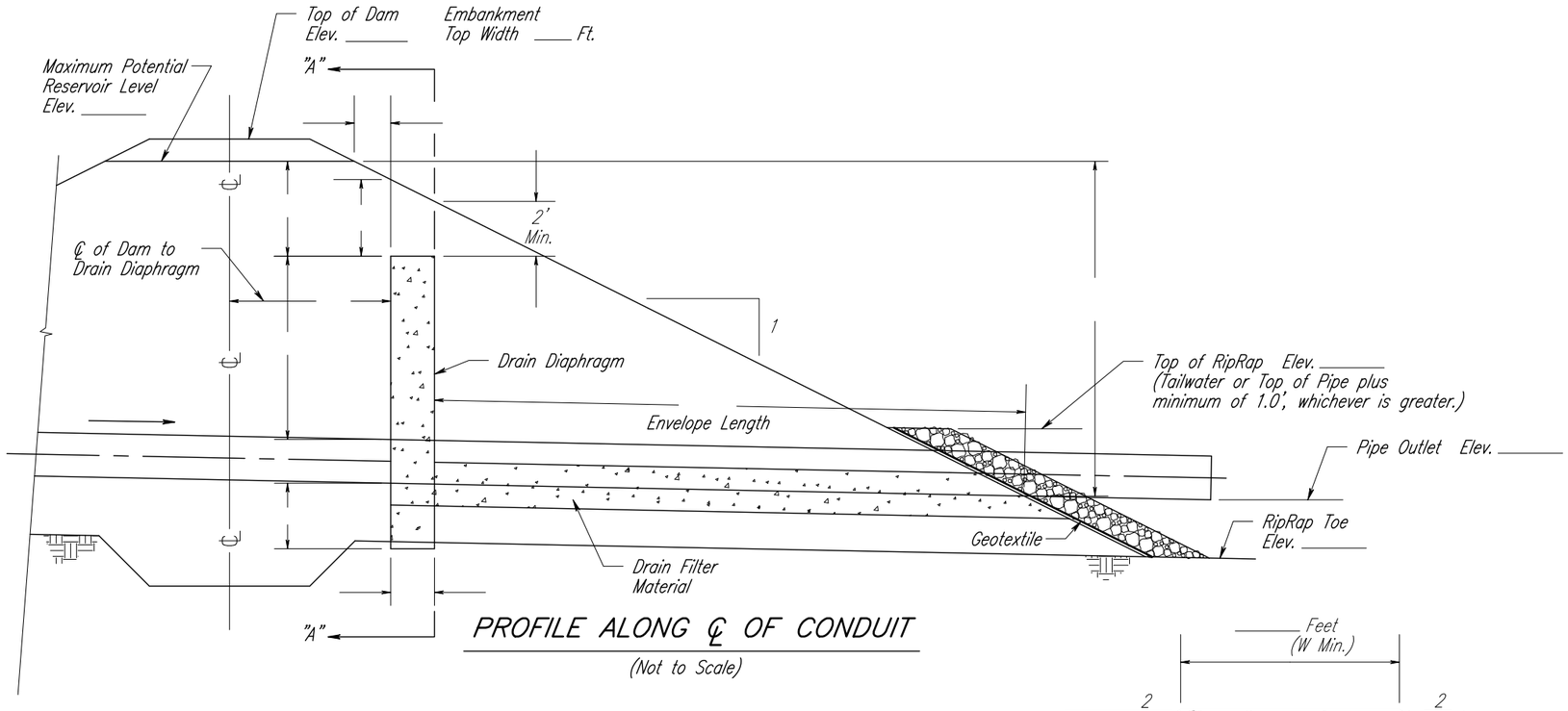

PROFILE ALONG ℄ OF CONDUIT

(Not to Scale)

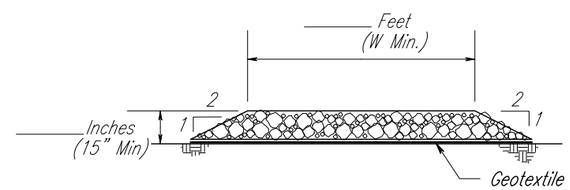

SECTION OF RIPRAP

Perpendicular to Slope

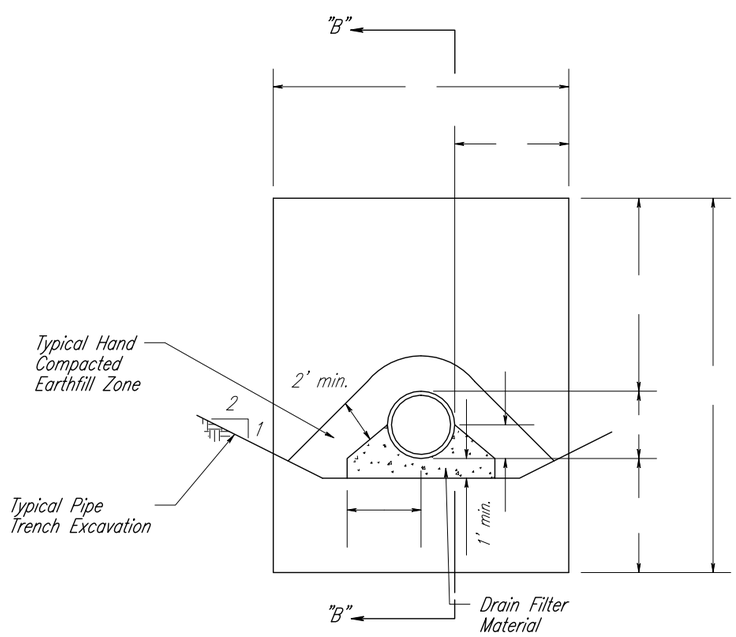

SECTION A–A

(Not to Scale)

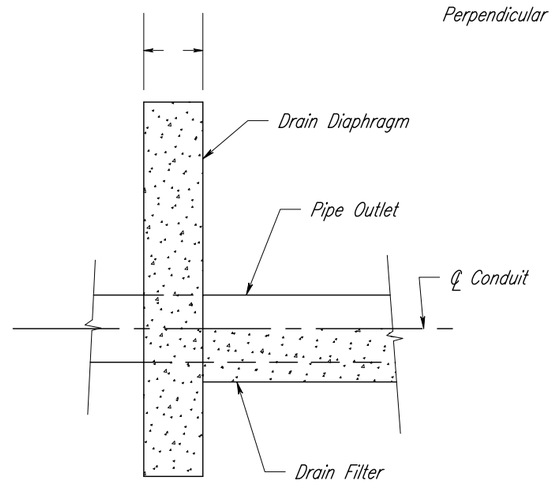

SECTION B–B

(Not to Scale)

SUMMARY OF DESIGN AND DIMENSIONS

DESIGN DATA

H = _____ Feet Hd = _____ Feet
X = _____ Feet D = _____ Inches
R = _____ Feet Y = _____ Feet
C = _____ Feet Aggregate Gradation # 1
Embankment
Backslope (Z1) = ___ Pipe Slope (S) _____ Ft./Ft.

DIMENSIONS

W = _____ Feet (Total Width of Drain Diaphragm)
T = _____ Feet (Total Height of Drain Diaphragm)
t = _____ Feet (Thickness of Single Filter)

ESTIMATED QUANTITIES

Drain Filter Material _____ Cubic Yards
Geotextile _____ Square Yards
Rock Riprap _____ Cubic Yards

DRAIN FILTER MATERIAL GRADATION

SIEVE SIZE	PERCENT PASSING

ROCK RIPRAP GRADATION

PERCENT SMALLER	WEIGHT RANGE (LBS.)	AVERAGE CUBIC DIMENSION
100	50 lb.	10"
50–80	30 lb.	7"
15–50	10 lb.	5"
0–15	3 lb.	3"

CONSTRUCTION NOTES

1.) The Drainage Diaphragm and envelope will be installed by placing Drain Filter Material in maximum 15 inch thick uncompacted lifts. Each lift will be saturated uniformly with approximately 1.2 gallons of water per cubic foot of loose Drain Filter Material prior to compaction. Each lift will then be compacted by a minimum of two passes of a hand-directed vibratory compactor over the entire lift surface. No compaction of the drain envelope above the pipe invert will be required.

2.) The maximum height of drop of the Riprap onto the Geotextile in the pipe outlet area shall be 3 feet.

MATERIAL NOTES

1.) The Geotextile shall conform to the Class I requirements specified in Table 2 for Nonwoven Geotextiles in Material Specification SD-592.

DRAINAGE DIAPHRAGM DETAILS

JOB PLAN 3.8 (07/2009)

REVISIONS		
DATE	APPROVED	TITLE
07/31/2009	Jay B. Cobb	State Conservation Engineer

Date
Designed
Drawn
Checked
Approved

PRODUCER _____
_____ SECTION ____ T. ____ R. ____
_____ COUNTY
_____ CONSERVATION DISTRICT

USDA – NRCS
State Office Engineering Staff
200 Fourth Street SW
Huron, South Dakota 57350

NRCS
Natural Resources Conservation Service
United States Department of Agriculture

File Name:
SD JobPlan_Drainage Diaphragm378_07_09v5.pro

Drawing No.

7/21/2009 2:23PM

Sheet 1 of 1