FENCE DETAILS (TYPE 2W)

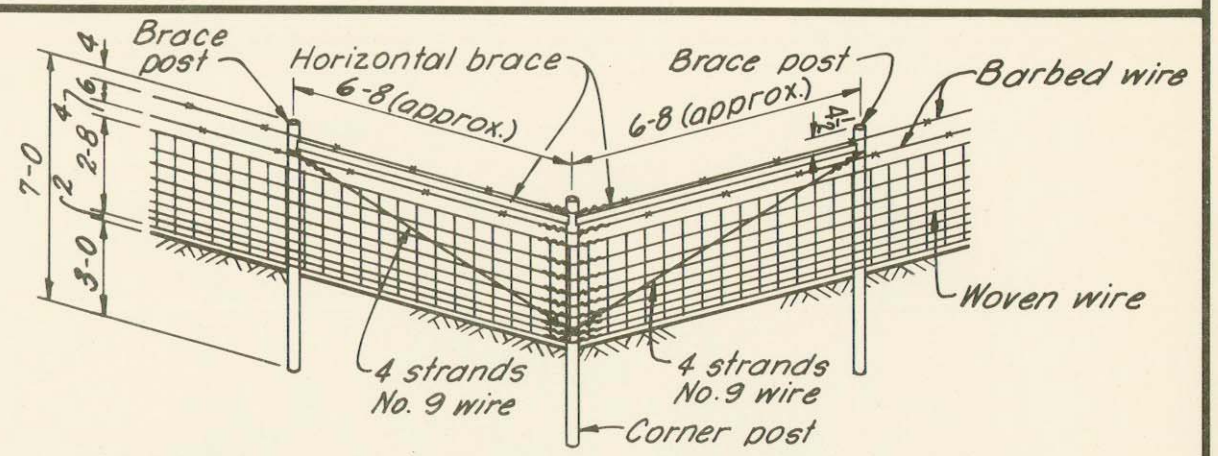

CORNER AND DIRECTION CHANGE ASSEMBLY

(Use for interior angles from 70° to 175°)

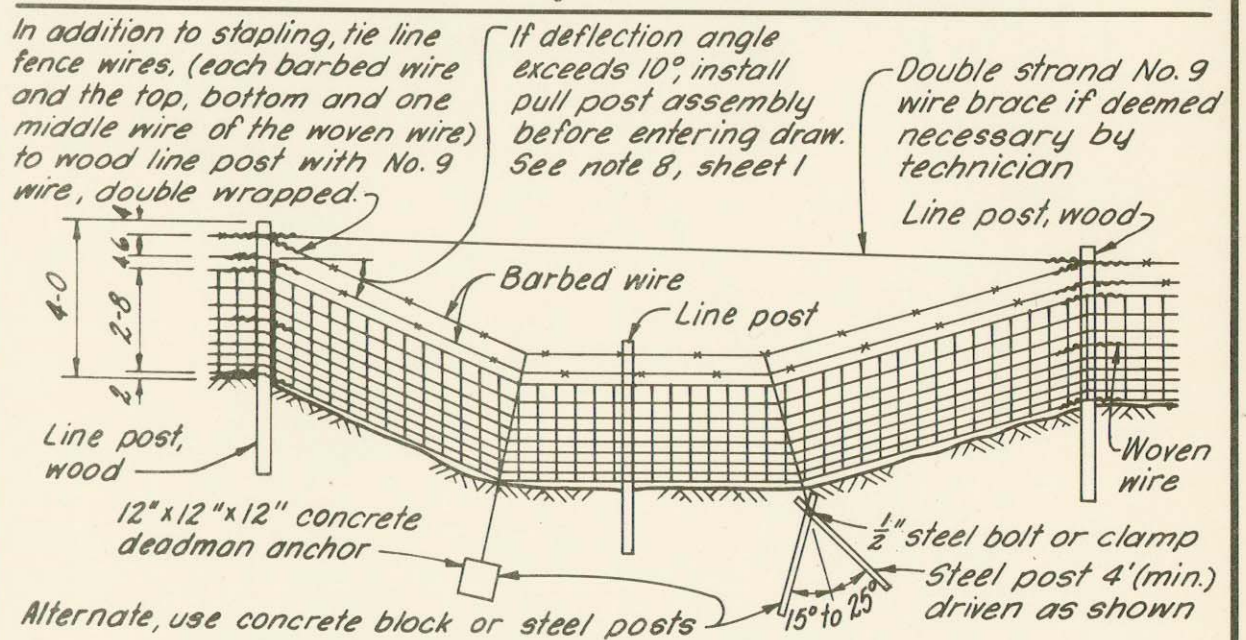

LINE FENCE ACROSS SHALLOW DRAWS

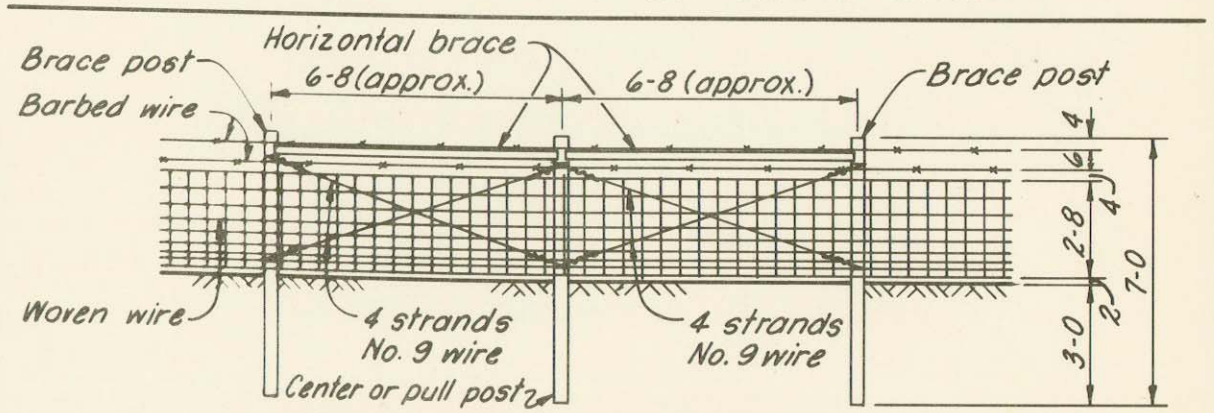

PULL POST ASSEMBLY

Reference	U. S. DEPARTMENT OF AGRICULTURE SOIL CONSERVATION SERVICE SOUTH DAKOTA	Standard Drwg. No. 5,L-23,000.1-2 Sheet 2 of 2 Date 3-66

FENCE DETAILS (TYPE 2W)

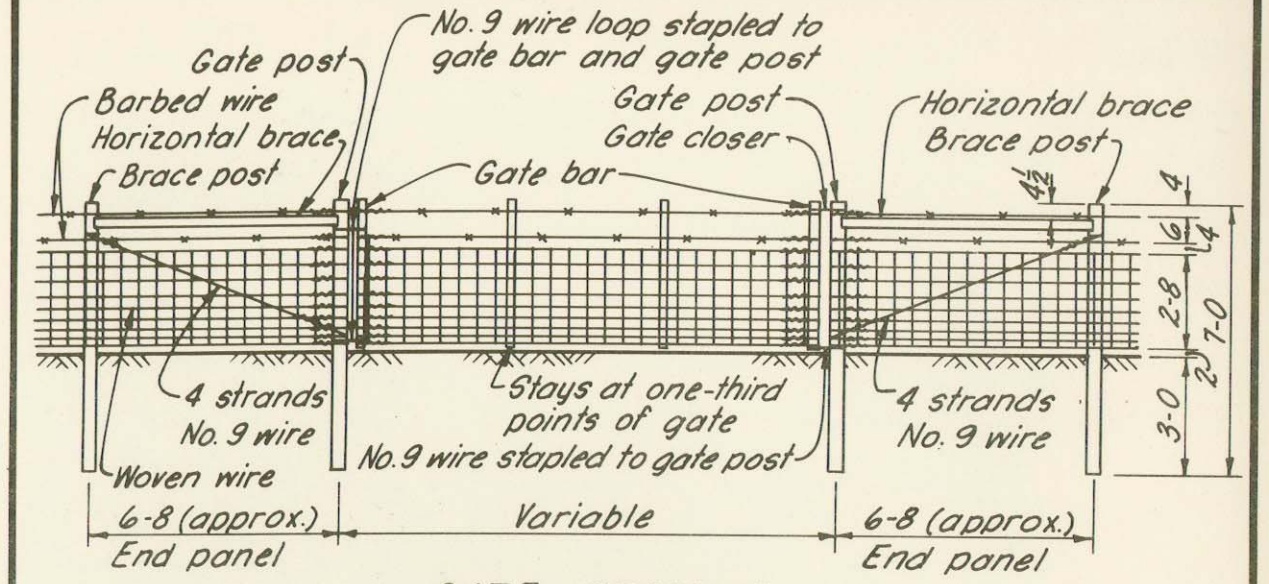

GATE SECTION

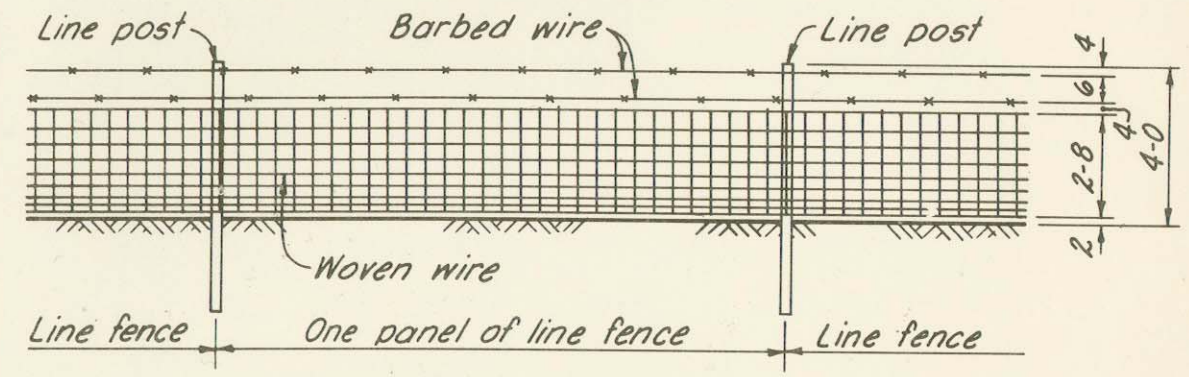

LINE FENCE SECTION

NOTES FOR FENCING DETAILS.

1. ALL POSTS SHALL BE SET VERTICALLY AND IN ALIGNMENT.
2. USE 3" DIA. POST OR 4" X 4" PRESSURE TREATED TIMBER APPROXIMATELY 6'-6" LONG FOR HORIZONTAL BRACES.
3. NOTCH GATE POSTS, BRACE POSTS AND CORNER POSTS 1" FOR THE HORIZONTAL BRACE. SECURELY FASTEN EACH HORIZONTAL BRACE WITH SPIKES.
4. CUT, WRAP AND TIE LINE WIRES AT ALL GATE AND CORNER POSTS.
5. DOUBLE STAPLE NO. 9 DIAGONAL BRACE WIRES TO GATE, BRACE AND CORNER POSTS. DOUBLE STAPLE EACH LINE WIRE AT ALL CORNER AND GATE POSTS.
6. USE 3" DIA. POST FOR GATE BARS. DOUBLE STAPLE EACH WIRE TO GATE BARS.
7. USE 2" X 2" X 4'-0" STAY AT ONE-THIRD POINTS OF GATE. SINGLE STAPLE EACH WIRE TO STAY.
8. USE 1 PULL OR CENTER POST AND ONLY ONE BRACE POST FOR LOCATIONS WHERE A PULL POST ASSEMBLY IS INSTALLED ON EACH SIDE OF DRAW.
9. SEE DRAWING FOR DETAIL OF SPLICE.

Reference	U. S. DEPARTMENT OF AGRICULTURE SOIL CONSERVATION SERVICE SOUTH DAKOTA	Standard Drwg. No. 5,L-23,000.1-2 Sheet 1 of 2 Date 3-66

USDA-SCS-LINCOLN NEBR. 1966