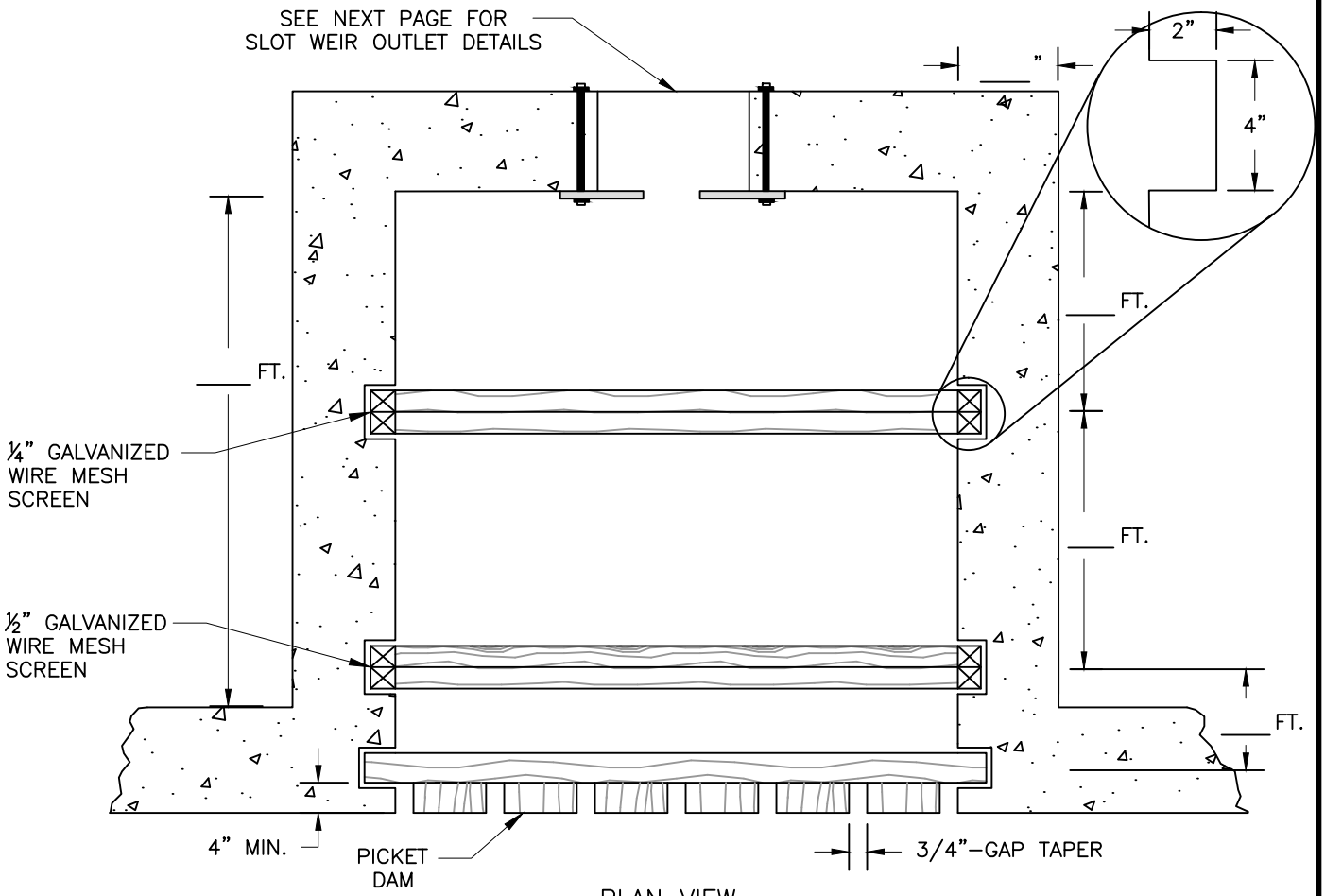

PLAN VIEW

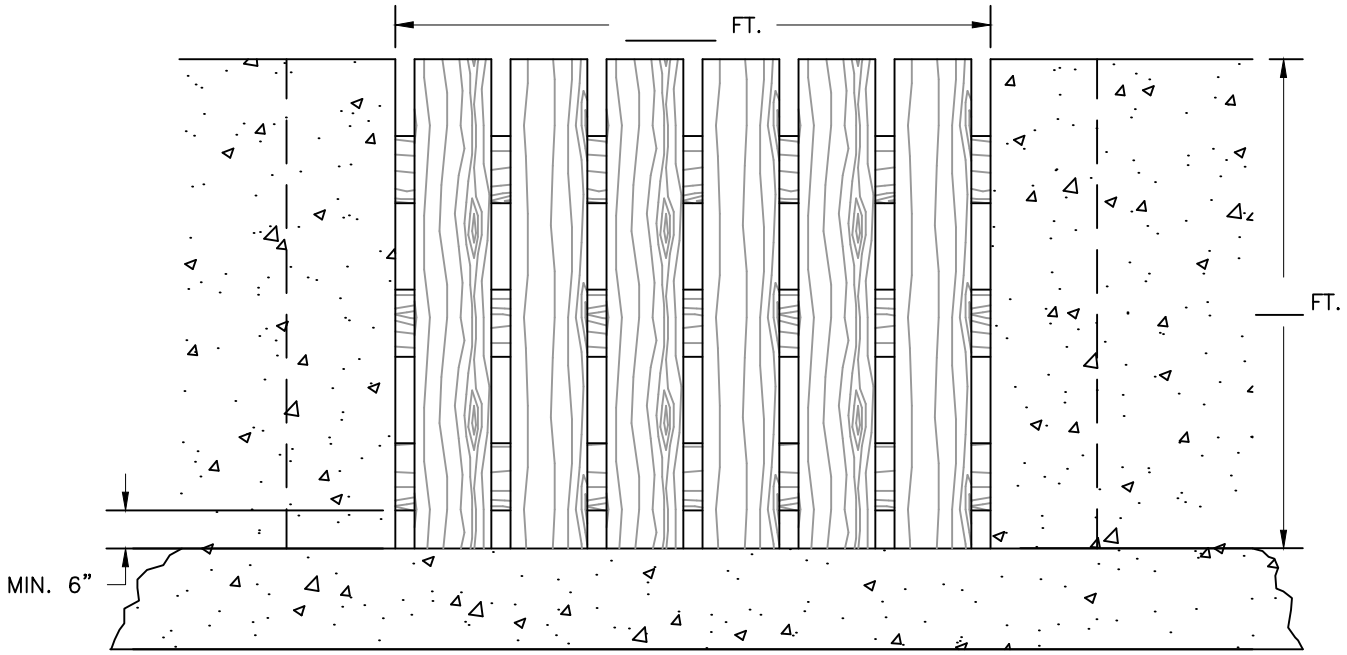

FRONT ELEVATION VIEW

WI–416C Page 1 of 2

USDA United States Department of Agriculture Natural Resources Conservation Service	SEDIMENT BASIN OUTLET BOX SLOT WEIR OUTLET OPTION CLIENT: COUNTY:	Date Designed Drawn Checked Approved	File Name WI–416C Date 07/14 Sheet of

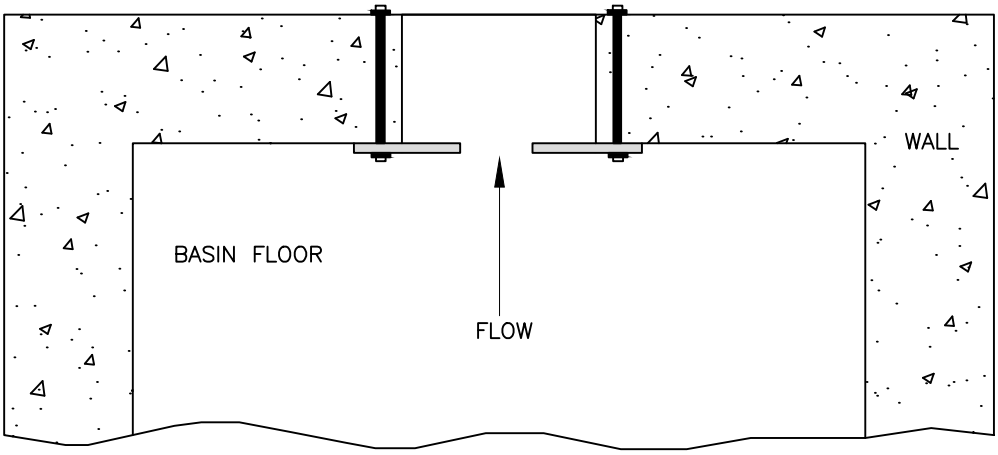

PLAN VIEW OF SLOT WEIR

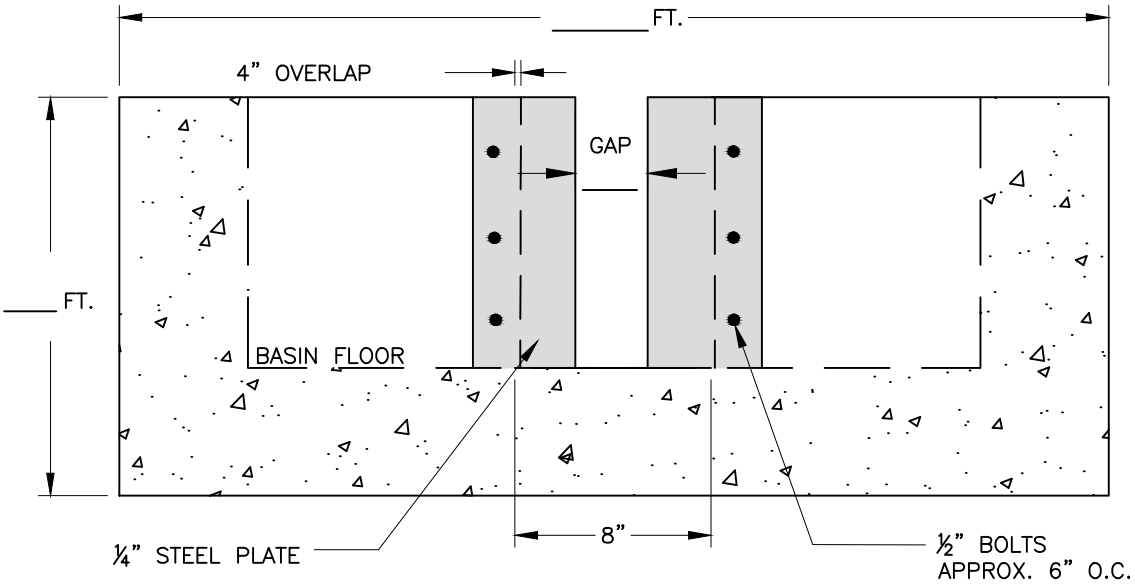

FRONT VIEW OF SLOT WEIR

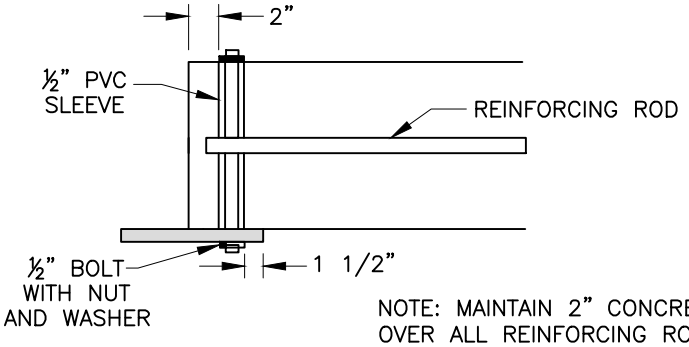

NOTE: MAINTAIN 2" CONCRETE COVER OVER ALL REINFORCING RODS.

DETAILS

QUANTITIES	
¼" X ____" X ____" STEEL PLATE	EACH
½" X ____" PVC PIPE	EACH
½" WASHERS	EACH
½" NUTS	EACH