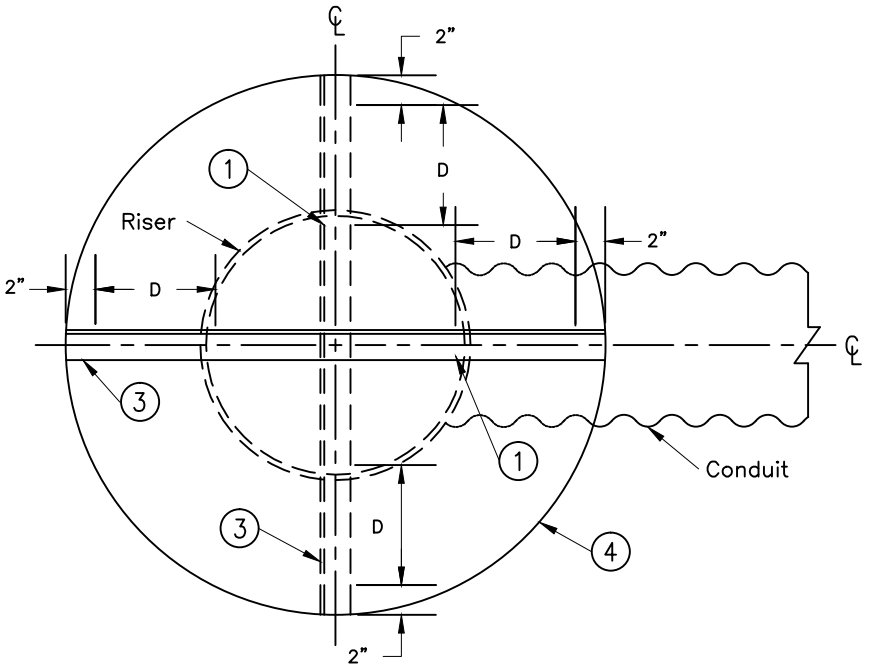

PLAN VIEW

Bill of Materials			
Mark	Item	Length	Quan.
1	3/8" x 1–1/2" Strap		4
2	1/4" x 1–1/2" Strap Spacer	2"	2
3	2" x 2" x 1/4" Angle		2
4	Baffle – 1/4" thick Metal Plate		1
–	1/2" diam. hex bolts with nuts and lock washers	1–1/2"	16
–	5/16" x 3–1/2" Eye Bolt *		4
–	7/16" rod with tank lug for ____diam. C.M. pipe *		1

* See Note 6

Table of Dimensions				
Riser Diam.	A (diam.)	B	C	D
18"	36"	6"	17–3/4"	8"
24"	48"	9"	20–3/4"	11"
30"	60"	12"	23–3/4"	14"
36"	72"	14"	25–3/4"	17"

Notes:

1. If the C.M. riser is steel, the baffle plate and angles shall be steel.
2. All steel shall be painted.
3. If the C.M. riser is aluminum, the baffle plate and angles shall be aluminum.
4. All bolts, nuts, and lock washers shall be galvanized, cadmium plated or stainless steel.
5. The antivortex baffle plate may be left square providing all corners are rounded with a 6" radius.
6. Optional for 30" and 36" diameter risers:
   The 7/16" diameter rod may be used in areas where a safety hazard exists. Do not use where trash accumulation is a problem. A 5/16" x 3–1/2" eye bolt with nut and lock washer shall be used to support the 7/16" diameter rod.

USDA United States Department of Agriculture
Natural Resources Conservation Service

HORIZONTAL ANTIVORTEX BAFFLE FOR C.M. RISER 18" TO 36" DIAM.

CLIENT: _____
COUNTY: _____

Date
Designed _____
Drawn _____
Checked _____
Approved _____

File Name WI–252
Date 07/14
Sheet of

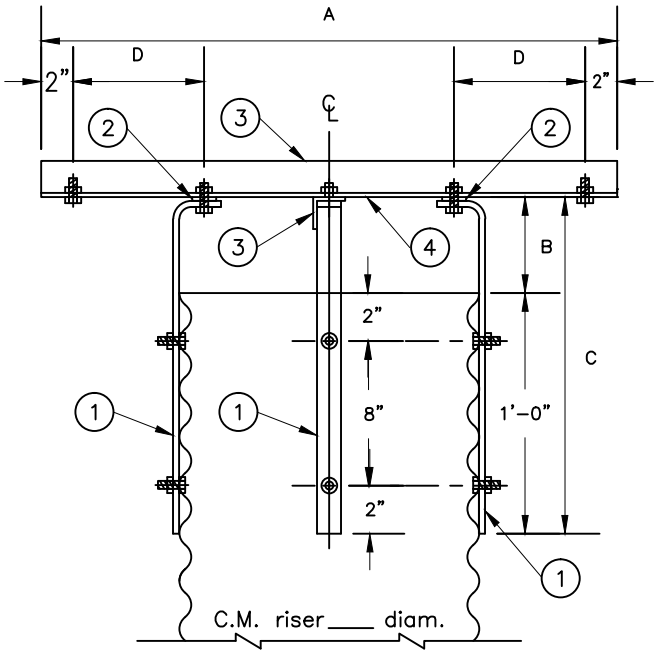

SIDE ELEVATION

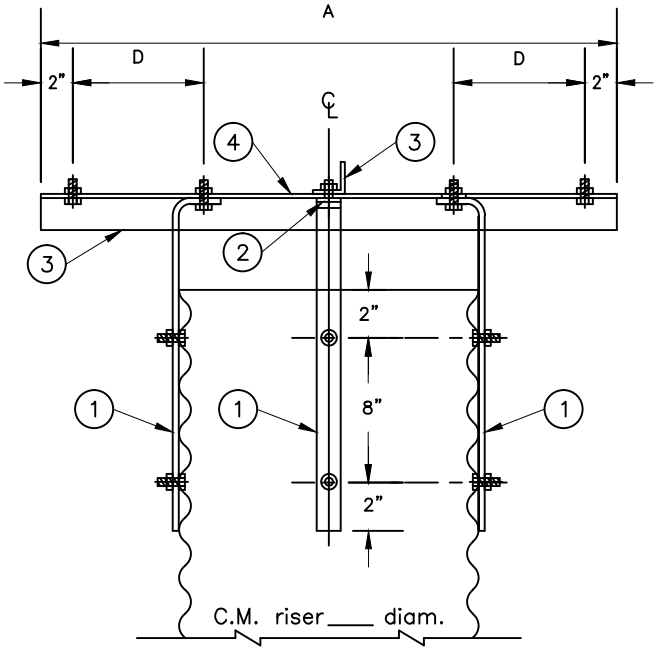

DOWNSTREAM ELEVATION

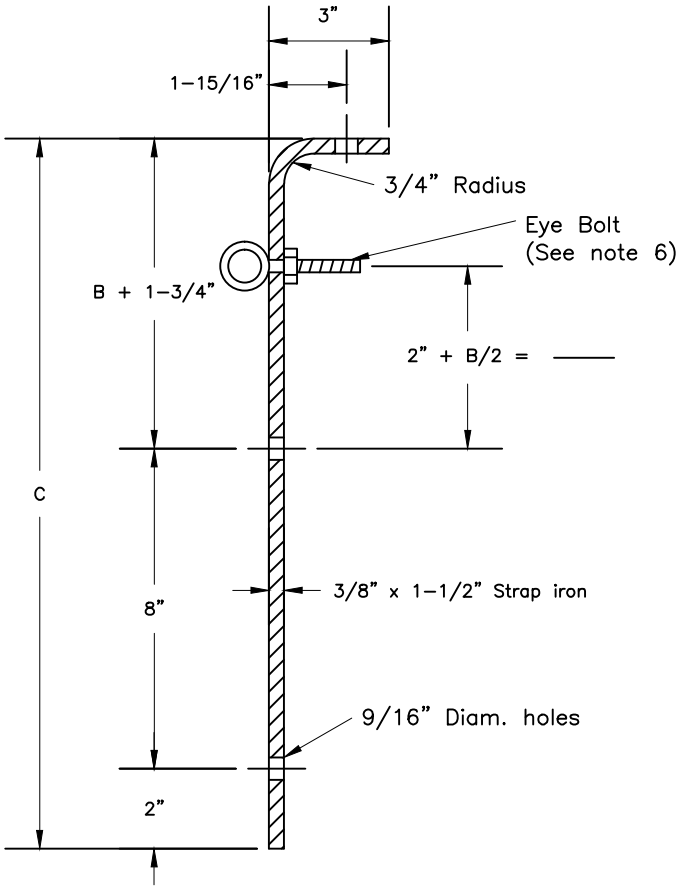

MARK 1 DETAIL

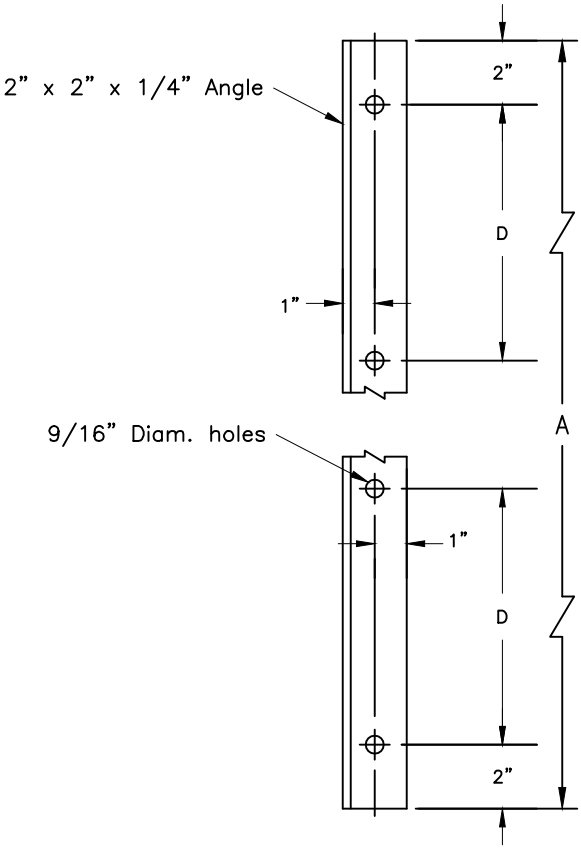

MARK 3 DETAIL