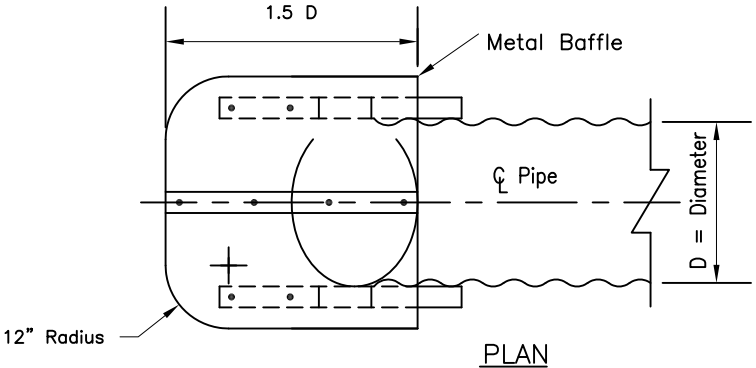

PLAN

Note:
Metal baffle shall have the same coating as the pipe to which it is attached. Where metal baffle is fabricated of more than one piece of metal, the separate pieces shall be securely fastened to each other. Sharp corners shall be removed. Metal baffle may be made of corrugated or smooth sheet metal and shaped circular, square or as shown.

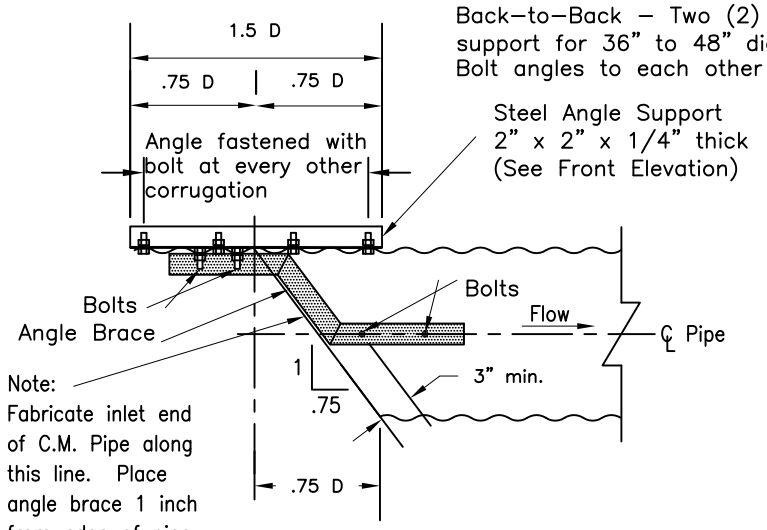

SIDE ELEVATION

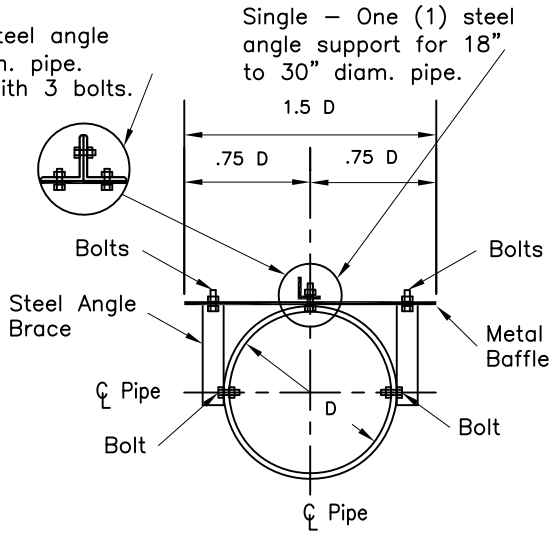

FRONT ELEVATION

THICKNESS OF METAL BAFFLE AND DIMENSIONS OF ANGLE BRACE

Diam. of Pipe D	Thickness of Baffle	Angle Brace Dimensions in Inches				
		a	b	c	d	e
18"	.064	10	6	9	8	5–1/3
21"	.064	10	7–1/8	9	9–1/2	5–1/3
24"	.079	13	8–1/4	12	11	8
30"	.079	13	10–1/2	12	14	8
36"	.109	13	12–3/4	12	17	8
42"	.109	17	15	15	20	10–2/3
48"	.138	17	17–1/4	15	23	10–2/3

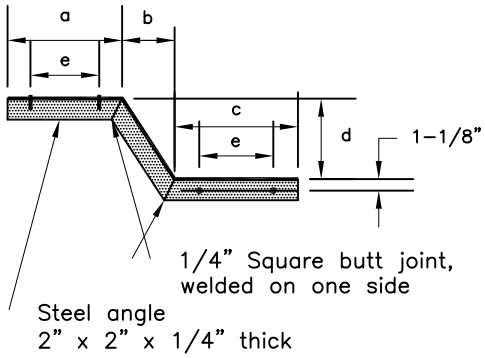

ANGLE BRACE DETAIL
2 Required

Notes:

1. All bolts shall be 1/2" x 1–1/2" with nut and lock washers.
2. All holes for bolts shall be drilled 9/16" diameter.
3. All nuts, bolts, and washers shall be galvanized, cadmium plated, or stainless steel.
4. Holes in the steel angles shall be spaced and located to match the corrugations in the pipe and baffle if helical pipe is used.
5. All galvanizing damaged by cutting, drilling, or welding shall be repaired by painting. See NRCS WI Construction Spec. 6.
6. Steel angles shall be painted.

USDA United States Department of Agriculture Natural Resources Conservation Service	HOOD INLET AND BAFFLE DETAILS FOR C.M. PIPE, 18" TO 48" DIAM. CLIENT: COUNTY:	Date Designed Drawn Checked Approved	File Name WI–251 Date 07/14 Sheet of