United States Department of Agriculture
Natural Resources Conservation Service

ARKANSAS STANDARD AR-ENG-419
(Lean-To Composter- 8' Wide Bins)

Know what's **below.**
Call before you dig.

NOTE:
1. This Drawing is to be used only with a stacking shed built according to the Arkansas Standard Drawing AR-ENG-419.

The following Construction Specifications are incorporated by reference:
AR-21 Excavation
AR-23C Earthfill Class C
AR-31 Concrete for Major Structures
AR-32 Structure Concrete
AR-34 Steel Reinforcement
AR-81 Metal Fabrication
AR-83 Timber Fabrication

**The full text of the Construction Specifications can be found on the web at http://www.ar.nrcs.usda.gov/technical/engineering_construction_specs.html*

I certify that the composter was built according to this set of drawings:

_____
Contractor/Landowner

This composter meets NRCS Standards and Specifications

_____
NRCS Representative

TABLE 1

No. of Primary Bins	Total Length Ft.-In.	Composting Area - Sq. Ft.	Area of Concrete Ramps - Sq.Ft.
2	17'-4"	254	289
3	25'-4"	372	393
4	33'-4"	489	497
5	41'-4"	606	553
6	49'-4"	724	705
7	57'-4"	841	809
8	65'-4"	958	913

Standard Drawing AR-ENG-419

Date
Designed
Drawn
Checked
Approved

ARKANSAS COMPOST FACILITY
(Lean-To Composter 8' WIDE BINS)
Customer:_____

United States Department of Agriculture
Natural Resources Conservation Service

File No.

Drawing No.
AR-ENG-419
Rev. 11-2010

Sheet 1 of 5

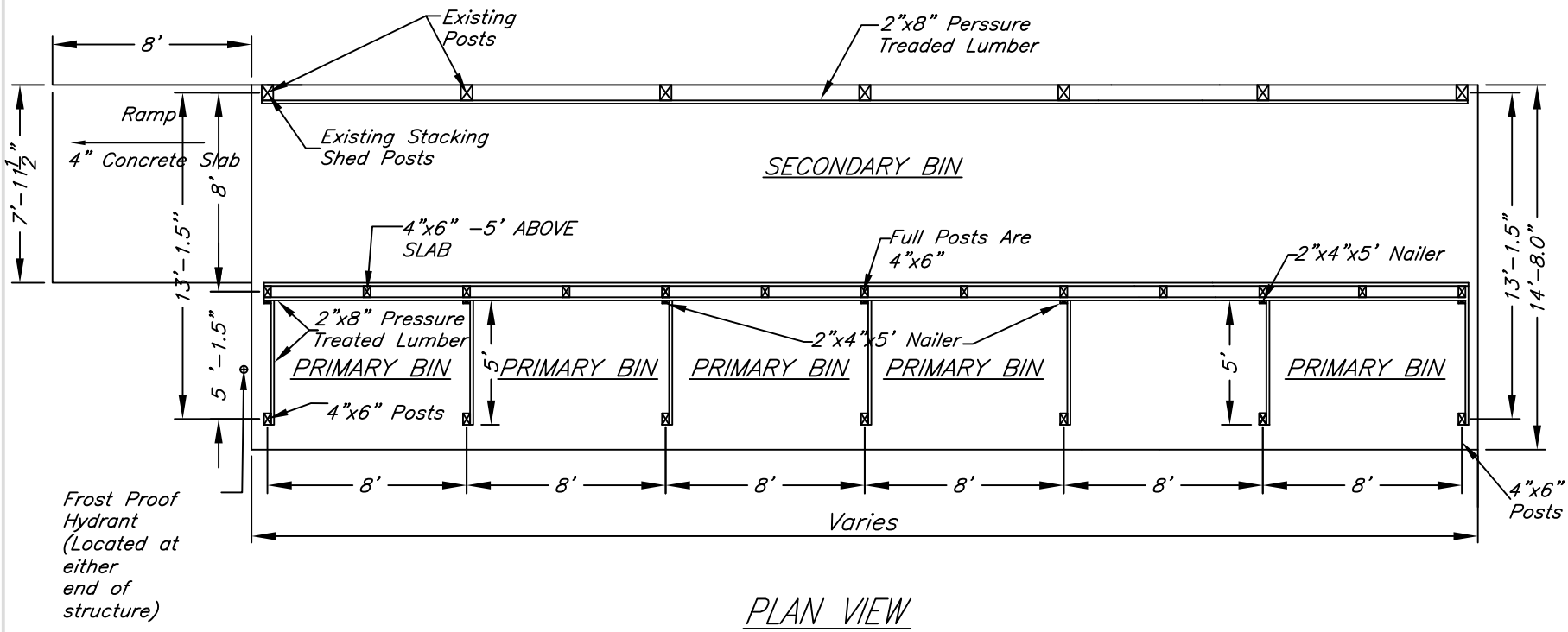

PLAN VIEW

NOTES:

1. Treated lumber (0.4 lbs. per cu. ft.) is to be used for all lumber except rafters, purlins, knee braces, and cross braces. All lumber is to be #2 Southern Yellow Pine.
2. Planks are to be 2" x 8" treated lumber of variable lengths to result in staggered joint locations.
3. Attach each purlin to each rafter with a manufactured framing anchor. Where Purlin joints are needed, they are to overlap 18" above a rafter.
4. Roofing material is to be attached to each purlin using fasteners and fastener spacing recommended by the roofing manufacturer. The contractor shall provide a copy of the manufacturers fastening recommendations prior to final inspection.
5. Double wall between secondary bin and primary bins will have a 2" x 8" cap.
6. Frost-proof hydrant is required UNLESS there is an alternative water source (such as a hydrant) available within 150'.

Date

Designed

Drawn

Checked

Approved

ARKANSAS COMPOST FACILITY
(Lean-To Composter 8' WIDE BINS)
Customer:

USDA NRCS
United States Department of Agriculture
Natural Resources Conservation Service

File No.

Drawing No.
AR-ENG-419
Rev. 11-2010

Sheet 2 of 5

NOTES:
1. Concrete is to have a 28 day strength of 3,000 psi.
2. Fiber reinforced concrete can be used in lieu of conventional concrete and reinforcing wire.
3. Thickened concrete edge is to be placed on all edges of concrete slab that will be receiving oncoming vehicular traffic.
4. Construction and/or contraction joints are to have a maximum spacing of 13'.

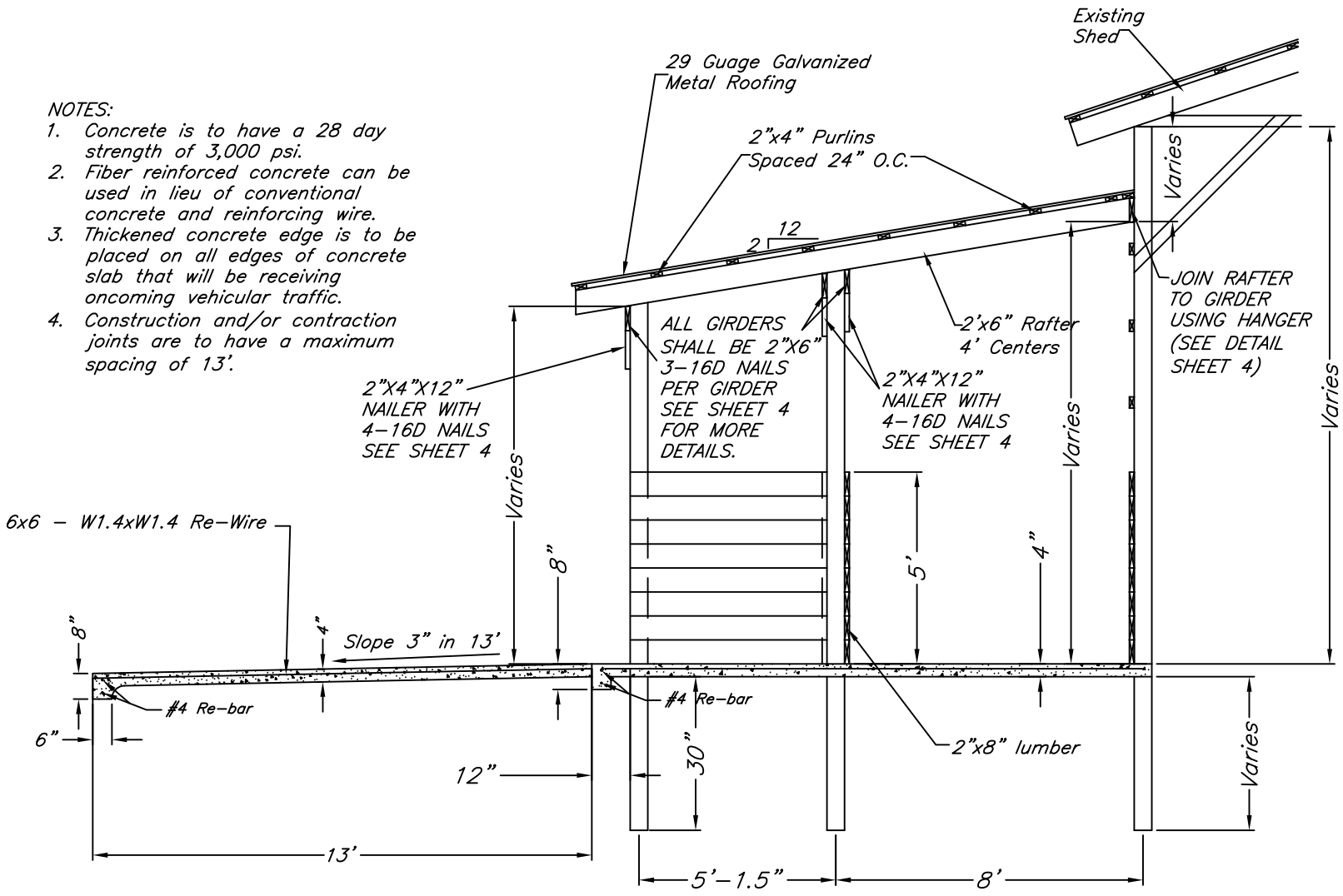

ELEVATION VIEW

Date
Designed
Drawn
Checked
Approved

ARKANSAS COMPOST FACILITY
(Lean-To Composter 8' WIDE BINS)
Customer:

USDA NRCS
United States Department of Agriculture
Natural Resources Conservation Service

File No.

Drawing No.
AR-ENG-419
Rev. 11-2010

Sheet 3 of 5

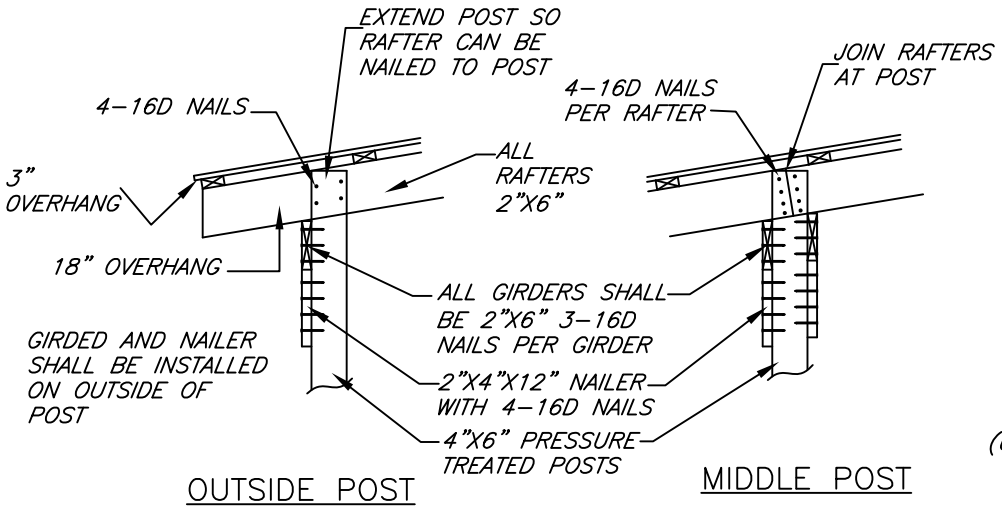

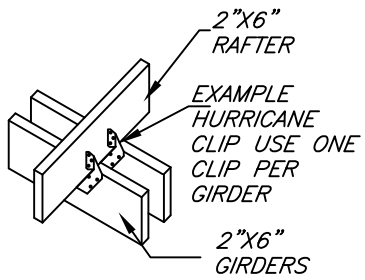

HURRICANE CLIP

(USE AT ALL RAFTER TO GIRDER CONNECTIONS WITHOUT POSTS)

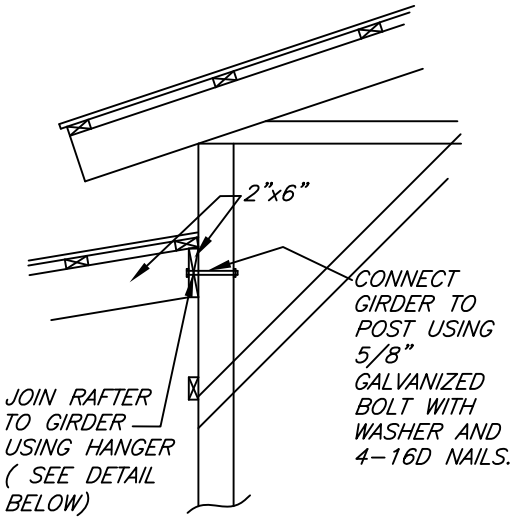

EXISTING POST

GIRDER AND RAFTER TO POST CONNECTIONS

NOTE:

1. USE MANUFACTURED HURRICANE CLIP FOR RAFTER TO GIRDER CONNECTIONS (WITHOUT POSTS). AN EXAMPLE IS SHOWN ABOVE.
2. ALL STRAPS AND CLIPS SHALL BE INSTALLED ACCORDING TO MANUFACTURER'S SPECIFICATIONS.
3. ONLY ONE GIRDER AND ONE CLIP ARE NECESSARY FOR OUTSIDE POSTS.
4. WHERE GIRDERS MEET IN A BUTT JOINT AT THE POST, 2-5/8" HEX BOLTS WITH WASHER & AND NUT, ONE THROUGH EACH GIRDER, WILL BE USED TO FASTEN GIRDER TO THE POST.

NOTE:

1. EXAMPLE HANGER IS SHOWN AT RIGHT.
2. INSTALL ACCORDING TO MANUFACTURER'S SPECIFICATIONS. PUT A NAIL IN EACH HOLE THAT IS PROVIDED.

RAFTER HANGER

(Shown for illustrative purposes only)

Date

Designed ____

Drawn ____

Checked ____

Approved ____

ARKANSAS COMPOST FACILITY

(Lean-To Composter 8' WIDE BINS)

Customer:_____

USDA NRCS

United States Department of Agriculture

Natural Resources Conservation Service

File No.

Drawing No. AR-ENG-419

Rev. 11-2010

Sheet 4 of 5

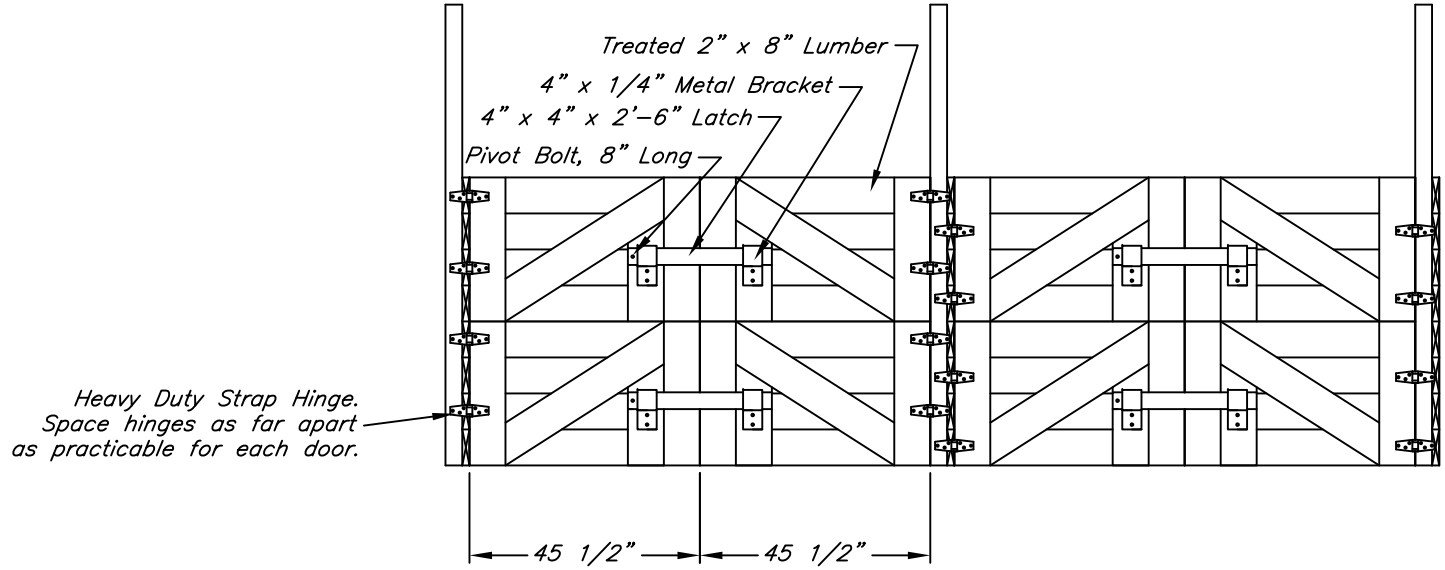

GATE DETAIL

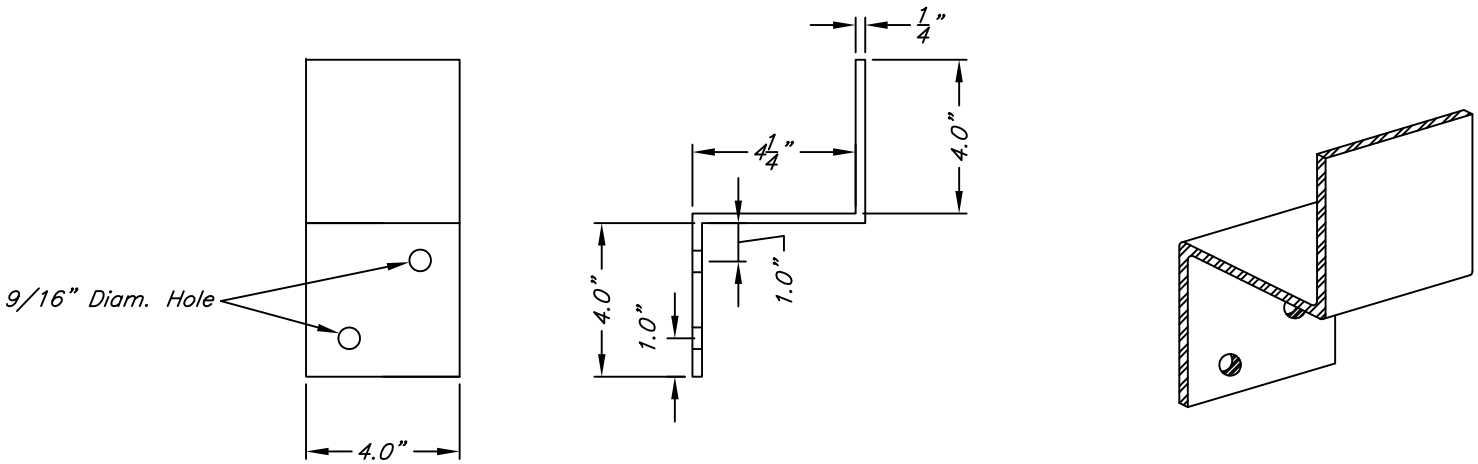

NOTE: Attach Metal Bracket witn 2 – ½" x 4" Bolts with nut and flat washers.

BRACKET DETAIL

Date
Designed
Drawn
Checked
Approved

ARKANSAS COMPOST FACILITY
(Lean-To Composter 8' WIDE BINS)
Customer:

USDA NRCS
United States Department of Agriculture
Natural Resources Conservation Service

File No.

Drawing No.
AR-ENG-419
Rev. 11-2010

Sheet 5 of 5