Print Form

Clear Form

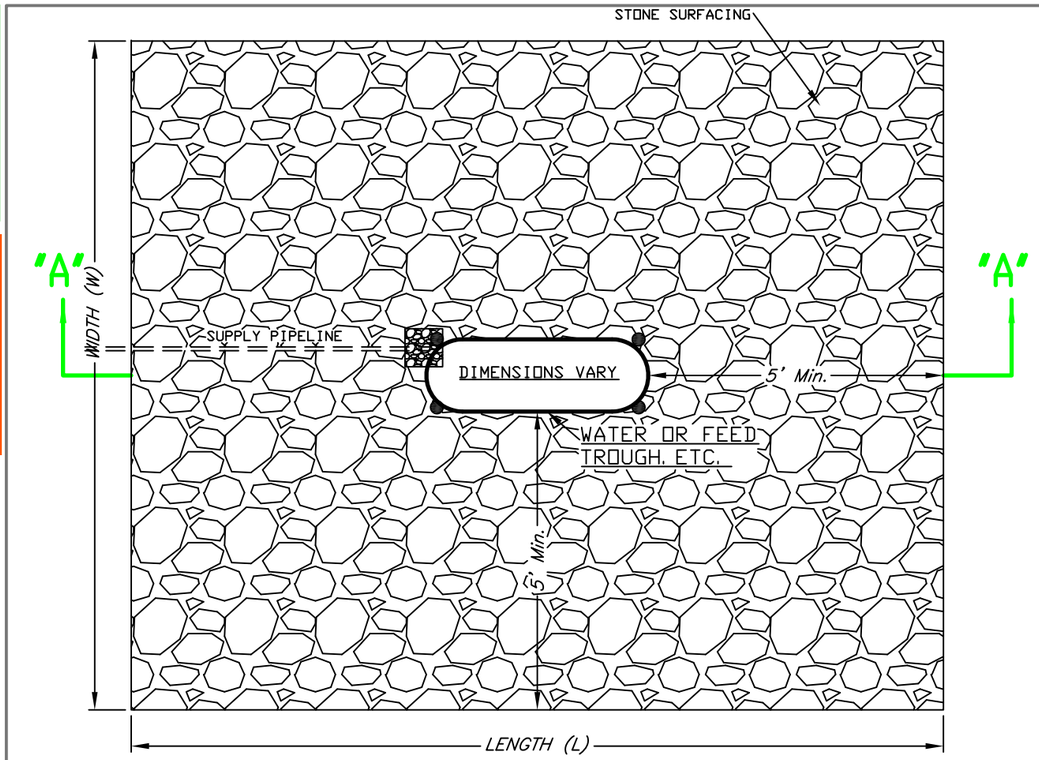

STONE HEAVY USE AREA

N. T. S.

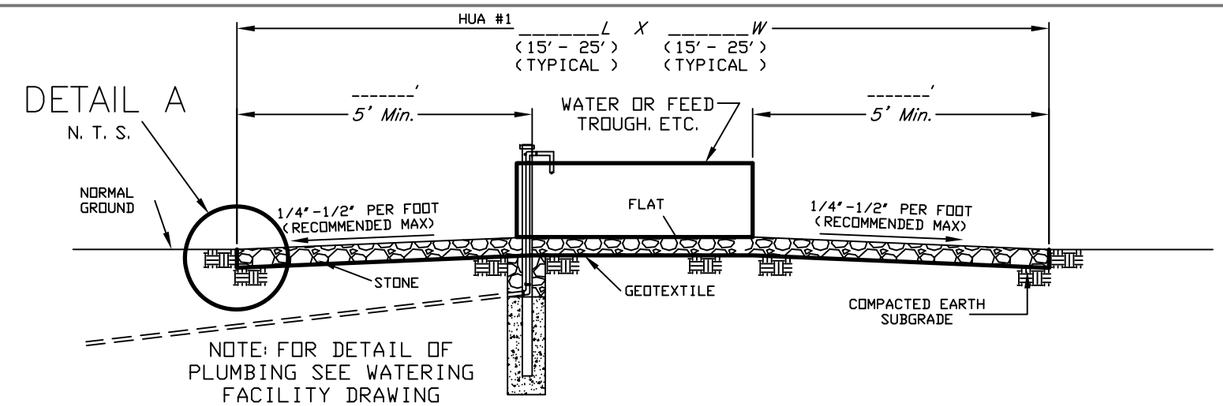

SECTION A–A

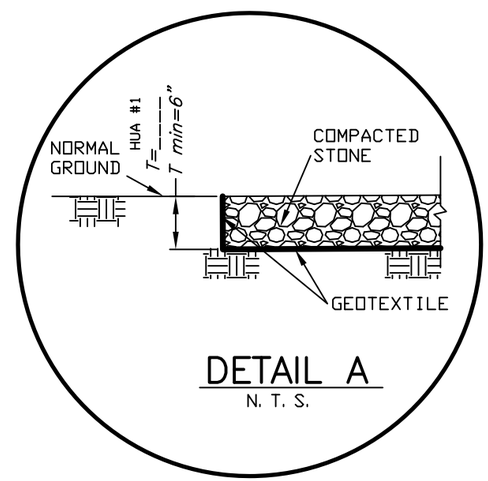

DETAIL A

N. T. S.

Use this area to sketch the HUA location,
(May be shown on aerial photo as an attachment.)

N

Plan View

TOWNSHIP_____RANGE_____SECTION_____

HEAVY USE PROTECTION WITH CRUSHED STONE SURFACING CONSTRUCTION NOTES

1. EARTH BELOW GRAVEL SHALL BE UNIFORMLY GRADED AND COMPACTED.
2. GEOTEXTILE MAY BE WOVEN OR NON-WOVEN AND SHALL COMPLY WITH CONSTRUCTION SPECIFICATION AR-95 GEOTEXTILE.
3. STONE SHALL BE CRUSHED LIMESTONE OR OTHER APPROVED MATERIAL. STONE SURFACE SHALL BE COMPACTED TO A DENSE SMOOTH FINISH.
4. SURFACE SHOULD SLOPE AWAY FROM WATER OR FEED TROUGH 1/4"-1/2" PER FOOT AND MAY BE ADJUSTED BY ENGINEER TO FIT THE TOPOGRAPHY AS NEEDED. AVOID SLOPES THAT CAUSE EROSIVE VELOCITIES.
5. STONE SHALL MEET MATERIAL SPECIFICATION ASTM D6092.
6. COAL BOTTOM ASH BLEND (BAB) MAYBE USED IN LIEU OF STONE WITH A MINIMUM THICKNESS OF 9 INCHES.
7. COAL FLY-ASH MUST COMPLY WITH CONSTRUCTION SPECIFICATION AR-29 SOIL CEMENT.
8. COAL FLY-ASH TREATED AREA THAT SUPPORT VEHICLE TRAFFIC SHALL BE 12" THICK.
9. ROCK GRADATION SHALL BE SB2 OR EQUIVALENT CUT AGGREGATE APPROVED BY THE NRCS ENGINEER COMPLYING WITH (ASSHTO T11 AND T27)REQUIREMENTS (AHTD TEST METHOD 304).

The Following Specifications are incorporated by reference and may be located @ http://www.ar.nrcs.usda.gov/technical/engineering_construction_specs.html

1. AR-23C Earthfill- Class C.
2. AR-29 Soil Cement.
3. AR-32 Concrete for minor structure
4. AR-95 Geotextile.

DIMENSIONS & QUANTITIES

	HUA #1 PLANNED	HUA #1 AS-BUILT	HUA #2 PLANNED	HUA #2 AS-BUILT	HUA #3 PLANNED	HUA #3 AS-BUILT
LENGTH						
WIDTH						
THICKNESS						
AREA SF	0	0	0	0	0	0
ROCK CY	0	0	0	0	0	0
ROCK TONS	0	0	0	0	0	0
GEOTEXTILE	0	0	0	0	0	0

Know what's **below.** **Call** before you dig.

This Practice does or does not Meet NRCS Standards & Specification

_____

NRCS Representative

COMMENTS: _____

_____

DATE:_____

ADAPTED FROM LOUISIANA S-6-52

ARKANSAS ENGINEERING STANDARD DRAWING	
/s/ Walt Delp, SCE	Standard Drawings shall NOT be altered without State Conservation Engineer Approval
STANDARD DWG NO.	AR-ENG-424-Stone Surfacing
DATE 3/11	SHEET 1 OF 2

(NOT TO SCALE)

	Date
Designed Wavey Austin	03/11
Drawn R. L. M	03/11
Checked L. J.	03/11
Approved W. D.	03/11

STONE HEAVY USE AREA
TYPICAL DRAWING

Project Name _____ Tract# _____ Farm# _____

Landowner _____ ,Arkansas

County _____

USDA NRCS United States Department of Agriculture
Natural Resources Conservation Service

File No. AR-ENG-424 SHUS Stone.dwg

Drawing No. Stone Heavy Use Area

Sheet 1 of 2

Print Form

Clear Form

PAGE 2 TO BE FILED FOR DOCUMENTATION

Name_____Conservation Practice_____Program_____

Purpose of HUA #1_____

Thickness of HUA #1 _____(FT) _____(Ft)
PLANNED AS-BUILT

HEAVY USE PROTECTION COMPUTATIONS

VOLUME OF STONE = LENGTH(L) X WIDTH(W) X THICKNESS(T) / 27 = C. Y., 1. 33 Tons PER C. Y.

GEOTEXTILE = LENGTH(L+(Tx2)) X WIDTH(W+(Tx2)) / 9. 0 = S. Y.

EXAMPLE: LENGTH = 26', WIDTH = 26', THICKNESS = 0. 5'

VOLUME OF STONE = (26 X 26) X 0. 5 / 27 = 12. 5 C. Y. X 1. 33 = Tons per C. Y.

GEOTEXTILE AREA = (27 X 27 / 9. 0) = 81 S. Y.

(PLANNED FOR HUA #1)

VOLUME OF STONE = (_____' X _____') X _____' / 27 = 0 C. Y. X 1. 33 = 0 Tons.

GEOTEXTILE AREA = (0 ____' X 0 ____' / 9. 0) = 0 S. Y.

(AS-BUILT FOR HUA #1)

VOLUME OF STONE = (_____' X _____') X _____' / 27 = 0 C. Y. X 1. 33 = 0 Tons.

GEOTEXTILE AREA = (0 ____' X 0 ____' / 9. 0) = 0 S. Y.

FOR IRREGULAR SHAPED AREAS ATTACHED SKETCH SHOWING DIMENSIONS

Use this area to draw a Profile of the Heavy Use Area. Include surface type (compacted earthfill, rock fill, gravel or stone).
Show the location of the Profile on the sketch above.

Profile

ARKANSAS ENGINEERING STANDARD DRAWING	
/s/ Walt Delp, SCE	Standard Drawings shall NOT be altered without State Conservation Engineer Approval
STANDARD DWG NO.	AR-ENG-424-Stone Surfacing
DATE 3/11	SHEET 2 OF 2

ADAPTED FROM LOUISIANA S-6-52

		Date
Designed	Wavey Austin	03/11
Drawn	R. L. . M	03/11
Checked	L. J.	03/11
Approved	W. D.	03/11

STONE HEAVY USE AREA
TYPICAL DRAWING

Project Name _____ Tract# _____ Farm# _____

Landowner _____ ,Arkansas

County _____

USDA NRCS
United States Department of Agriculture
Natural Resources Conservation Service

File No. AR-ENG-424 SHUA Stone.dwg

Drawing No. Stone Heavy Use Area

Sheet 2 of 2