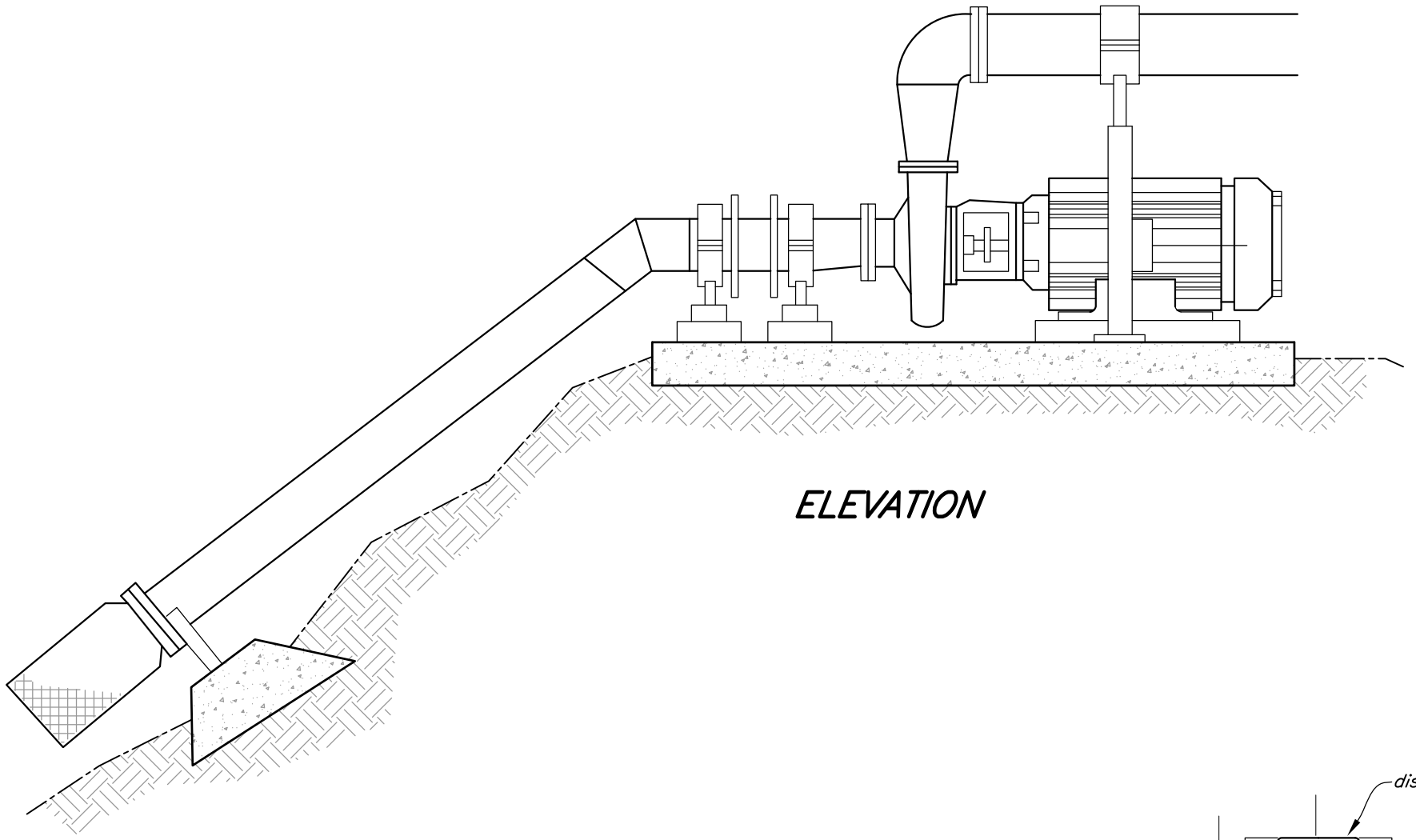

ELEVATION

HP = H.P. motor required

IN = inch diameter pump

MODEL = Model

NPH = Net Positive Suction Head

S = inch suction pipe diameter

O = inch outlet pipe diameter

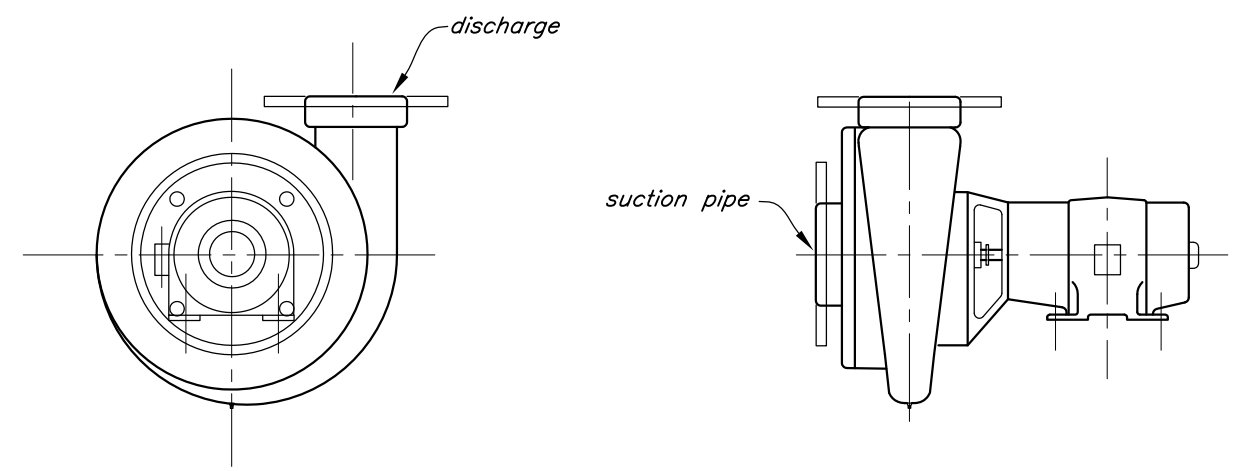

PUMP DETAIL

SPECIAL PROVISIONS:

All non-galvanized steel shall be painted with two coats of primer and one coat of aluminum paint or equivalent (i.e. cold-tar).

OPERATION AND MAINTENANCE:

To prevent water hammer damage, fill pipeline slowly by throttling with gate valve.

Open and close valves slowly.

This drawing requires supporting technical documentation prior to use and must be adapted to the specific site.

Drawing not to scale.

Date

Designed

Drawn NRCS OREGON 4/2009

Checked

Approved

Title

CENTRIFUGAL PUMP

IRRIGATION

NRCS Natural Resources Conservation Service

United States Department of Agriculture

File Name or_centrifugal_pump.dwg

Drawing No.

Sheet of

E:\cad_support\CAD Drawings\(c)Irrigation1206\Pumps\or_centrifugal_pump.dwg, 4/14/2009 7:34:44 AM