TECHNICAL NOTES

U.S. DEPARTMENT OF AGRICULTURE Portland, Oregon SOIL CONSERVATION SERVICE

Range No. 8 March 1990

PASTURE AND RANGE FENCES

The attached information on pasture and range fences are to supplement the Standards and Specifications for Fencing 382.

PASTURE AND RANGE
FENCES

SOIL CONSERVATION SERVICE
U.S. DEPARTMENT OF AGRICULTURE

PASTURE AND RANGE FENCES

I. INTRODUCTION

The sketches in this technical note are to supplement the Fencing Standards and Specifications #382 dated May 1981. Copies of individual sheets can be reproduced by the District Conservationists for handouts to contractors, farmers or ranchers as needed.

Sources of Information used in the preparation of this Technical Note:

U.S. Forest Service
U.S. Dept. of Interior Bureau of Land Management
Soil Conservation Service Specifications
Technical Notes from California and Arizona
Pasture and Range Fences, Mountain States Publication No.2R March 1967. Michael A. McNamee & etal.
ASAE Engineering Practice ASAE EP250.2
How to Build Fences With USS Mex-ten 200 High-Tensile Fence Wire. (a source not used, but is available from the area office.)

Contents of Fencing Tech Note

I. Introduction i

II. Breaking Force of Post 1

III. Barbed Wire Design 2

IV. Woven Wire Design 3

V. Suspension Fence Design 4

VI. Alignment 5

A. Change of alignment 5
B. Change in vertical 6
C. Post anchor for low spots 6

VII. Crossing Arroyos Fence Designs. 7

VIII. Brace Post and Corner Post Design 10

A. Brace wire attachment 10
B. Pull post assembly 11
C. Wooden diagonal braces 12
Steel horizontal braces 12
D. Deadman brace 14-15
E. Steel brace and corner post assemblies. 16
F. Brace for deflection angles 18

IX. Steel Posts 19

X. Staples and Attachment of Wire 20

Splicing of wire 21

XI. Stretching Woven Wire 22

XII. Line Jack Design 23

XIII. Gate Fasteners 24

XIV. Gate Assemblies 28

XV. Cattle Guard Assemblies 32

Antelope crossing 35

XVI. Buck and Pole Fence Design 36

XVII. Let-down Fences. 43

XVIII. Recreation Gates - Stiles - Ladders - Barriers 48

XIX. Electric Wire Fences 59

XX. Curve or Contour Fence 62

II. Breaking force of Post

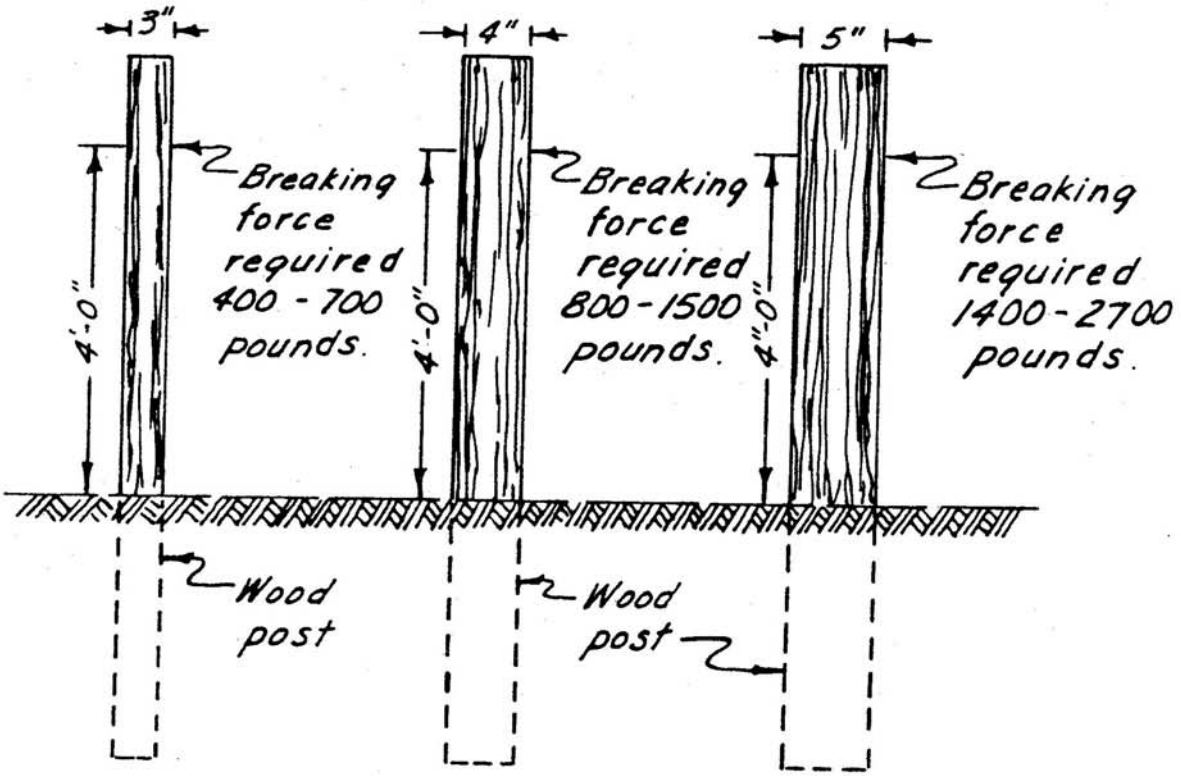

III. Barbed Wire Design

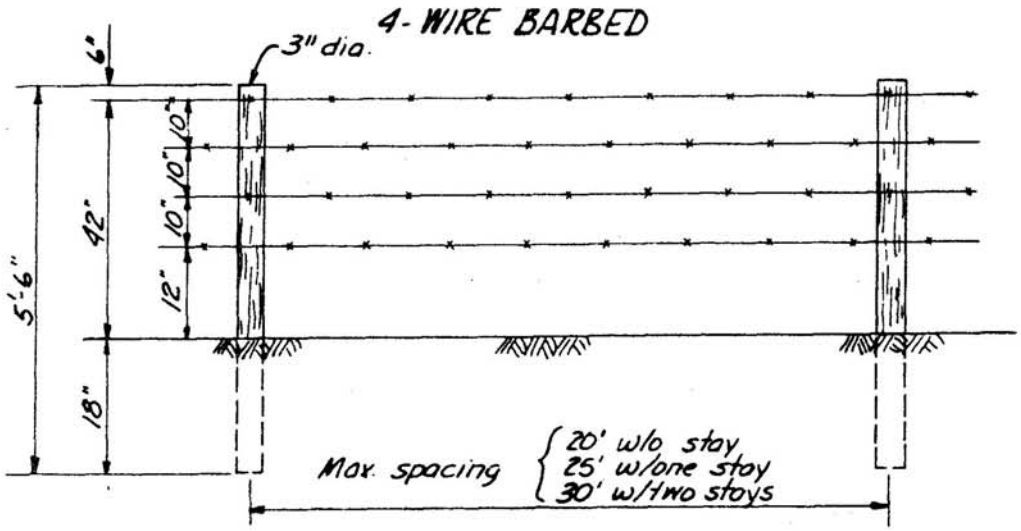

a. In antelope country bottom wire can be replaced with smooth wire.

b. No stays should be used for antelope fence.

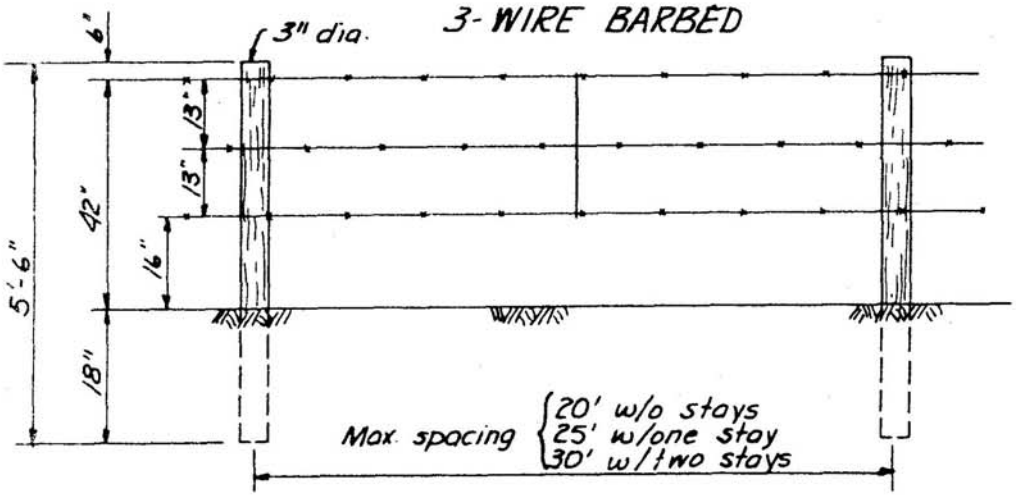

IV. Woven Wire Design

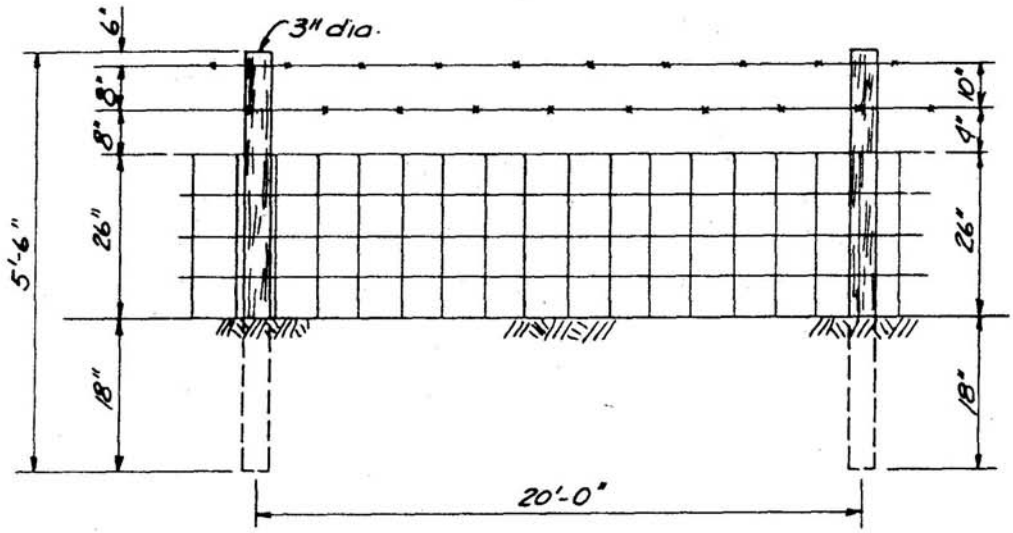

On deer and elk range use this spacing.

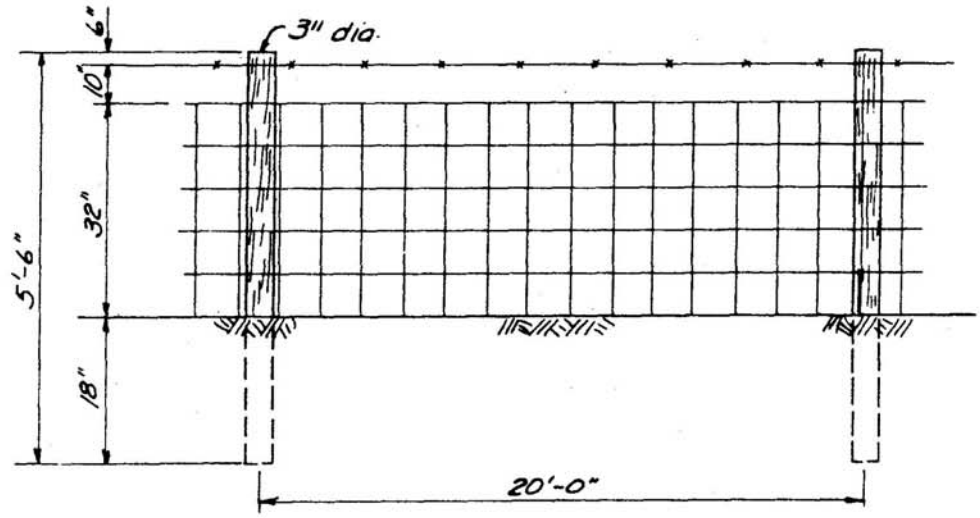

a. Net-wire fences are generally barriers to antelope and therefore, their construction on antelope ranges is discouraged.

b. If grazing management dictates the building of a woven wire fence, antelope crossings shall be considered.

V. Suspension Fence Design

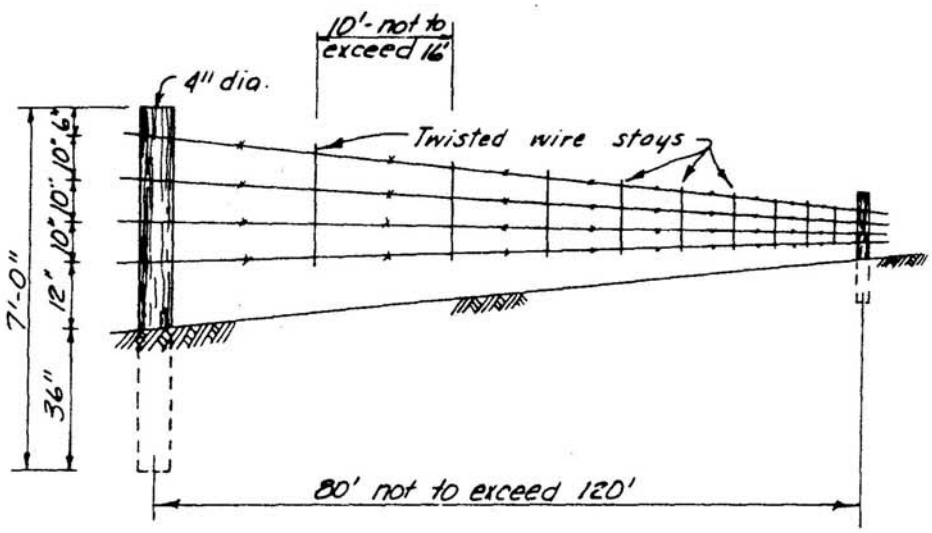

a. Where antelope are a consideration, the bottom wire shall be 16" above the ground.

b. Where antelope are a consideration, the bottom barbed wire may be replaced with smooth wire to minimize physical injuries.

c. Corner and brace posts and line braces will require different specifications than a regular fence. Refer to specification part on suspension fences for details.

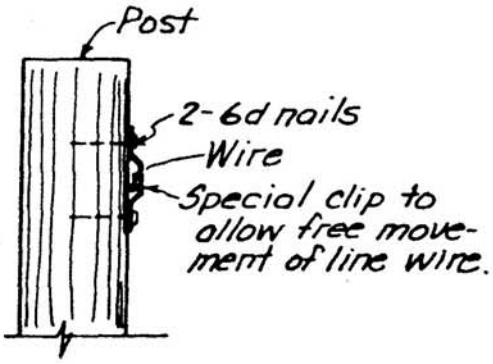

VI Alignment

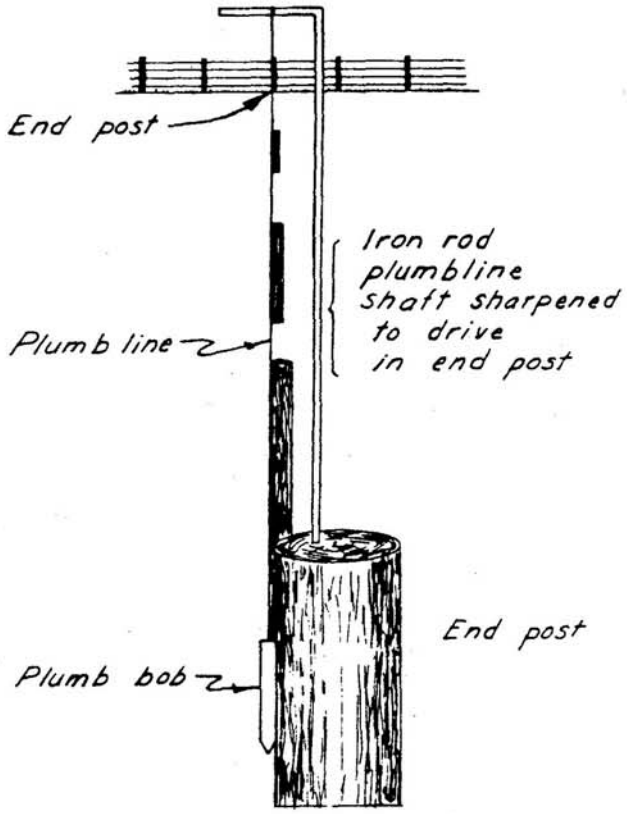

A. Change in Alignment

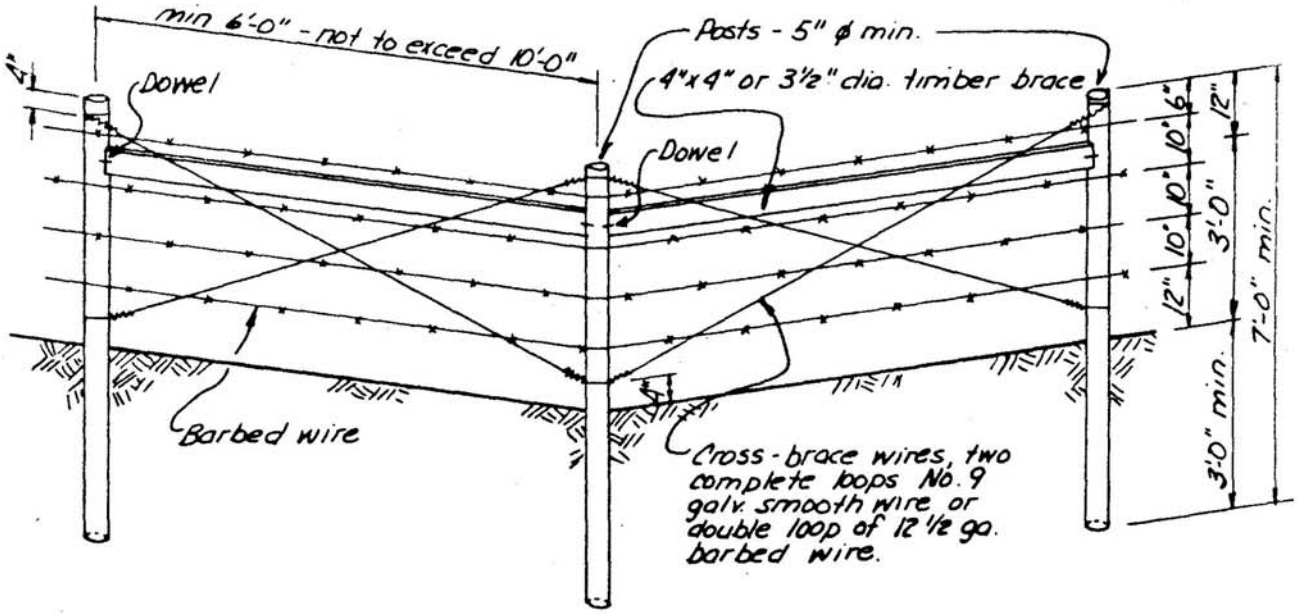

VI. Alignment (cont.)

B. Change in Vertical

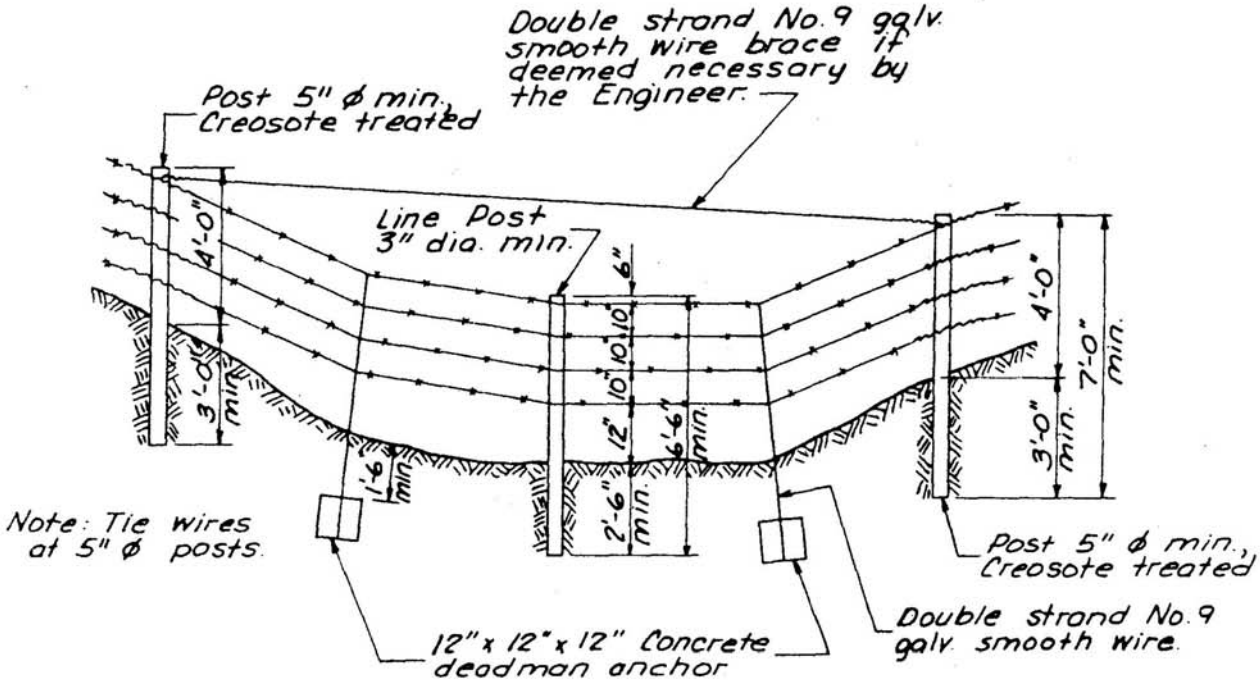

C. Post Anchor for Low Spots

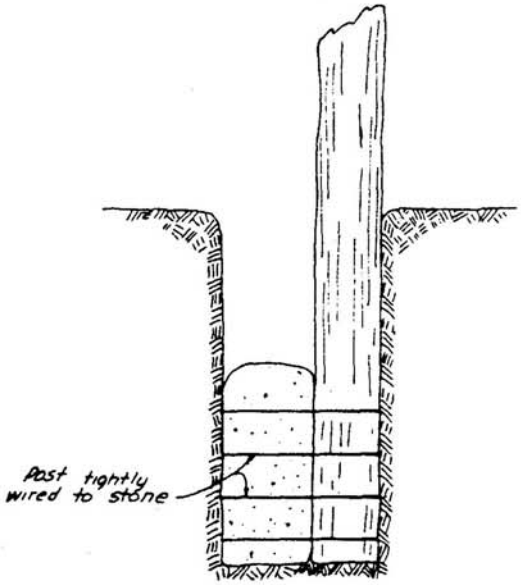

POST ANCHOR

For gently sloping low spots (no scale)

VII. Crossing Arroyos Fence Designs

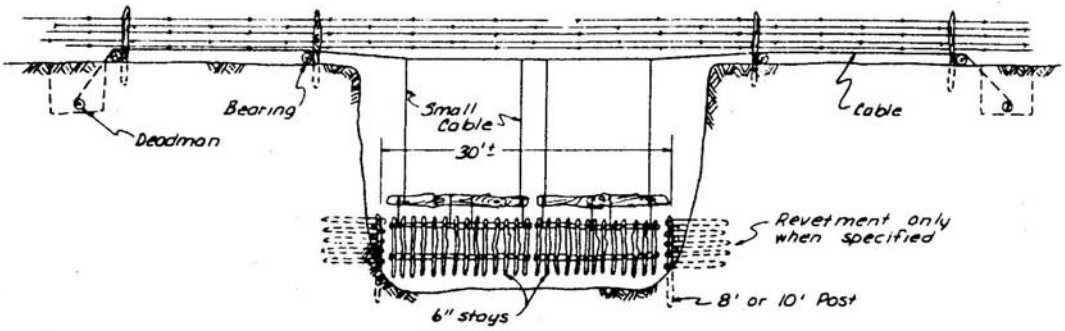

PROFILE

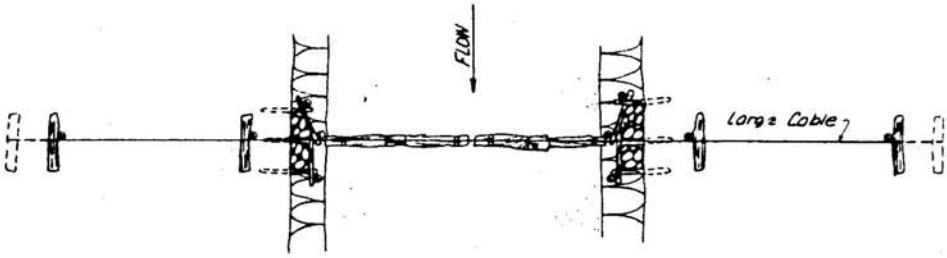

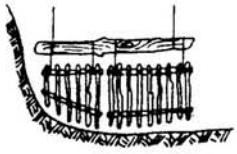

END DETAIL

When revetment is not specified

VII. (cont.)

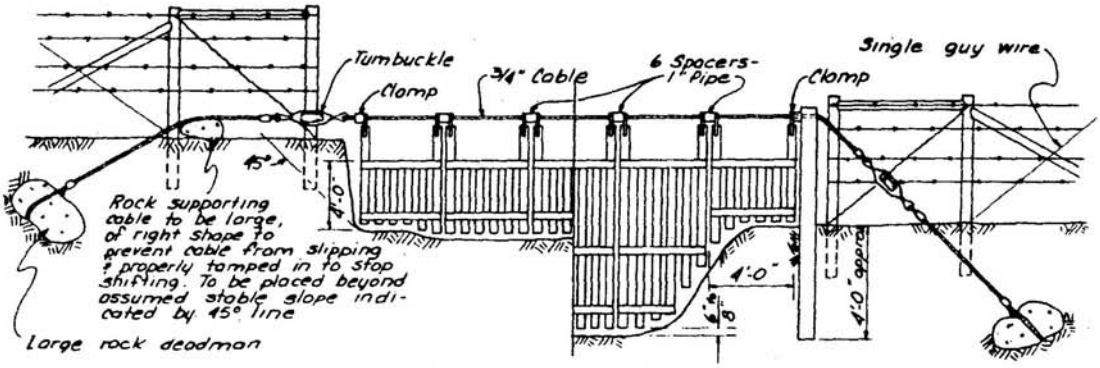

VIEW LOOKING UPSTREAM

SHOWING SUSPENSION DIRECT FROM DEADMAN

SHOWING DEADMAN SUSPENSION THRU CORNER POST

SWINGING TYPE WATER GATES

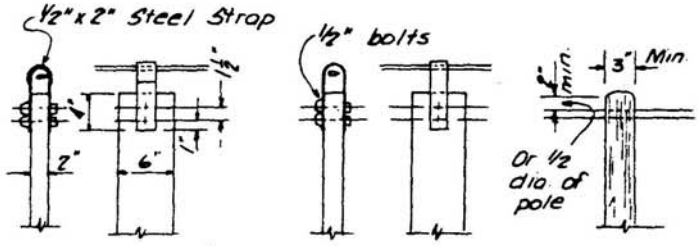

ALTERNATIVE GATE HANGERS

NOTES:
Swinging gate to be even with or downstream from fence; never upstream from fence.
Cross-bars on downstream side of gate panels.
If round poles are used, top dia. to be 3" minimum, size to depend on length and weight of panel. When round or split poles are used, wire together instead of nailing.

VII. (cont.)

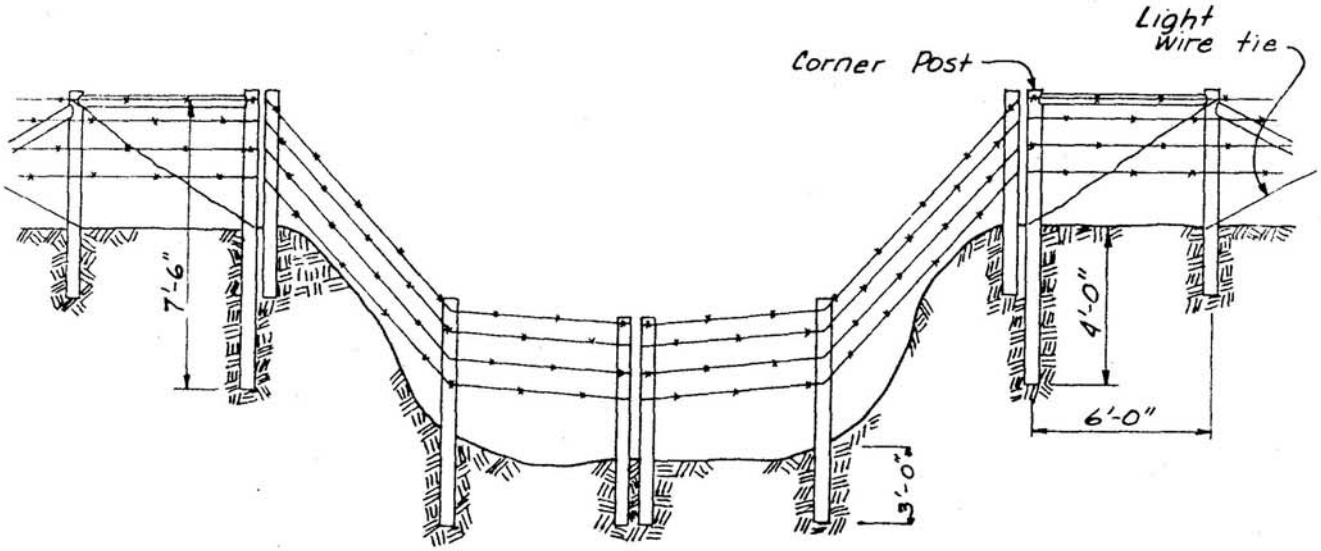

BREAKER TYPE WATER GATE
(for shallow arroyo)

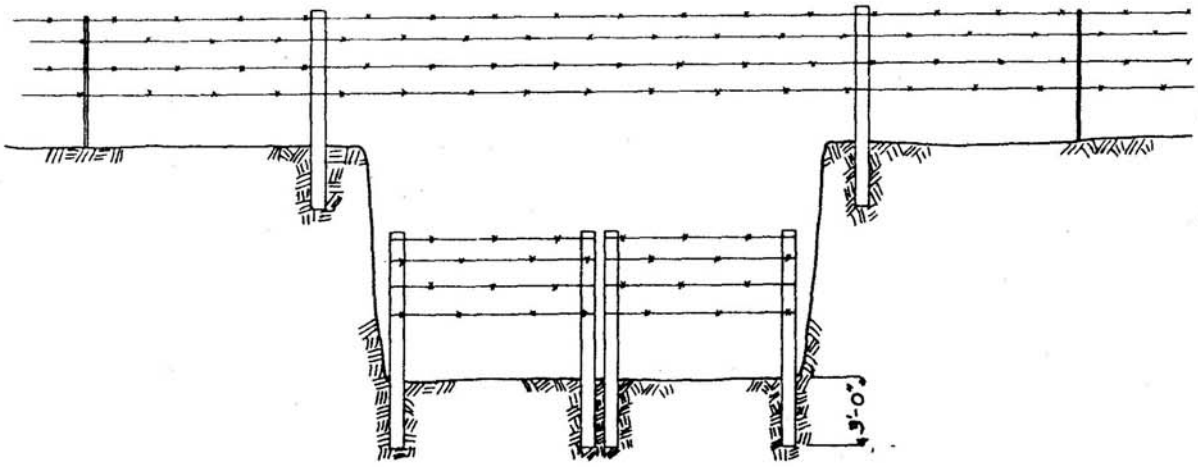

BREAKER TYPE WATER GATE
(for deep arroyo)

VIII. Brace Post and Corner Post Design

A. Brace Wire Attachment

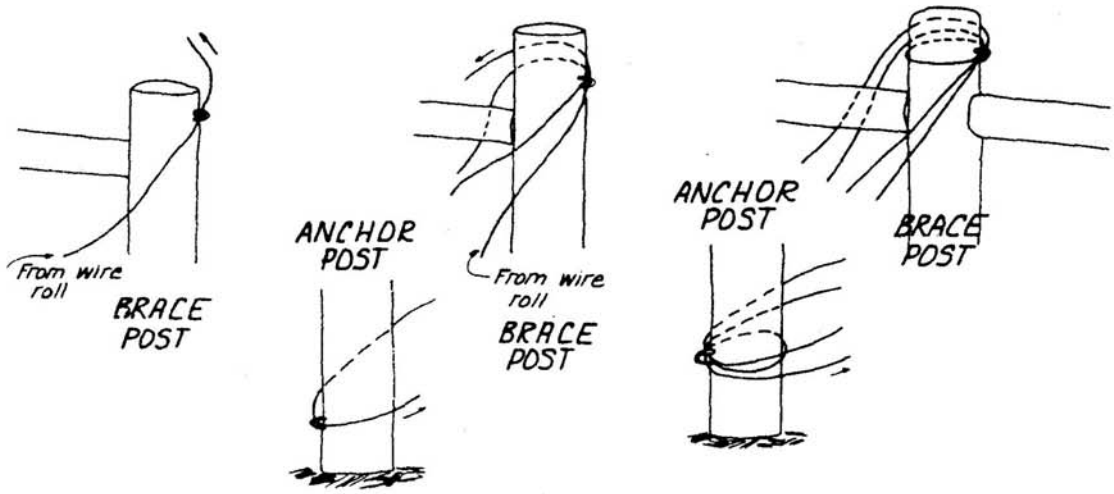

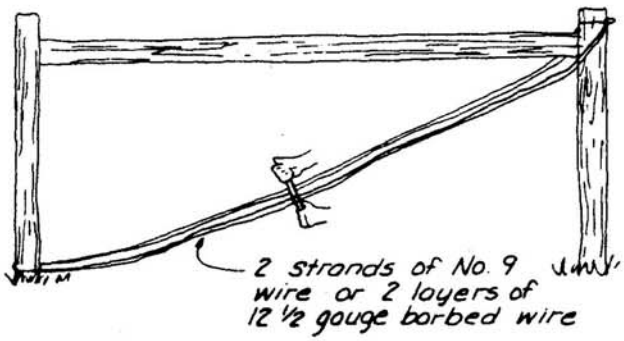

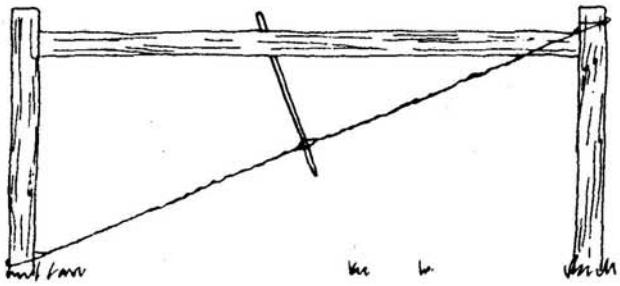

Steps in attaching brace wire to a corner brace

VIII. (cont.)

B. Pull Post Assembly

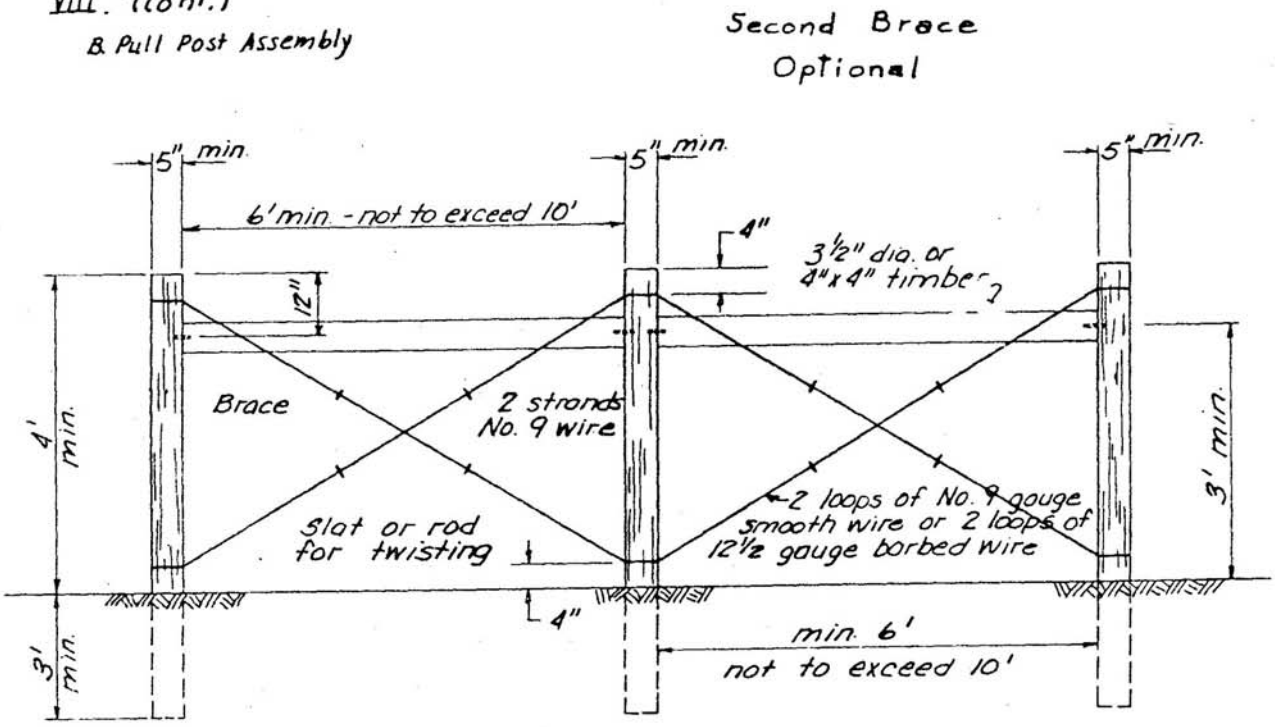

C. Wooden Diagonal Braces - Steel Horizontal Braces

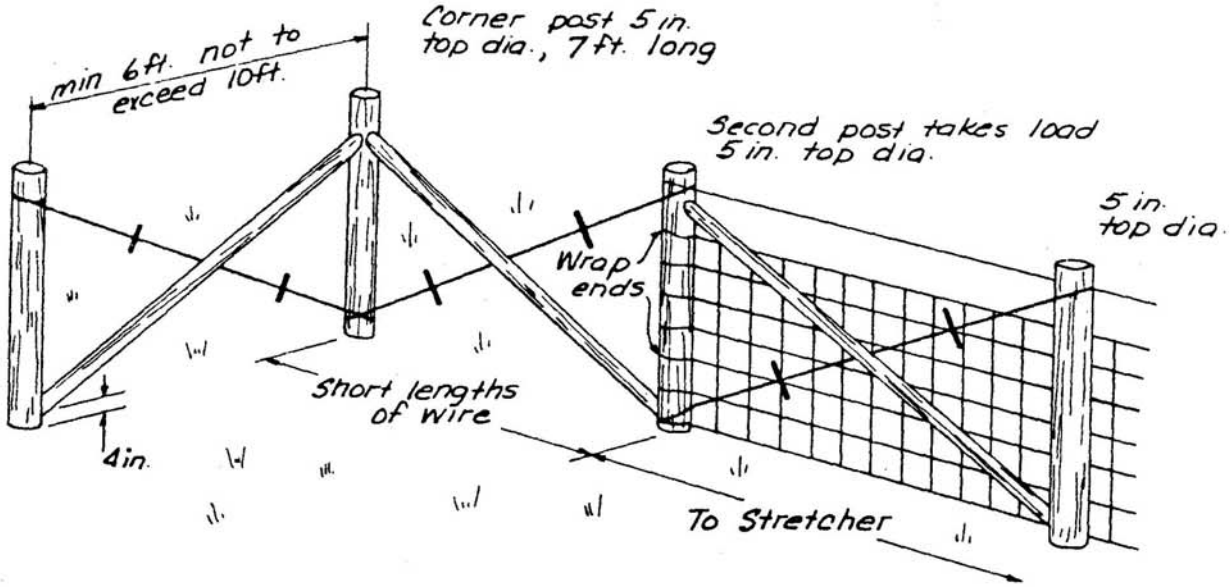

VIII. (cont.) C. (cont.)

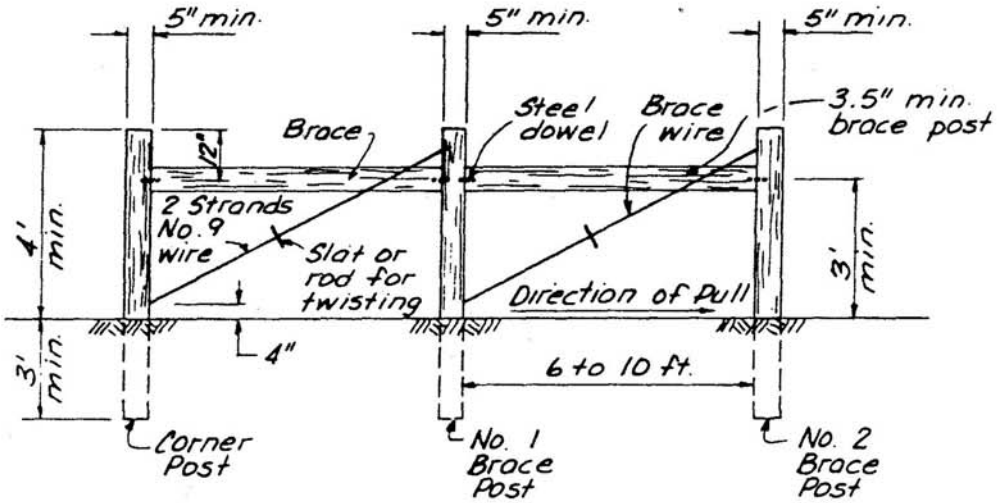

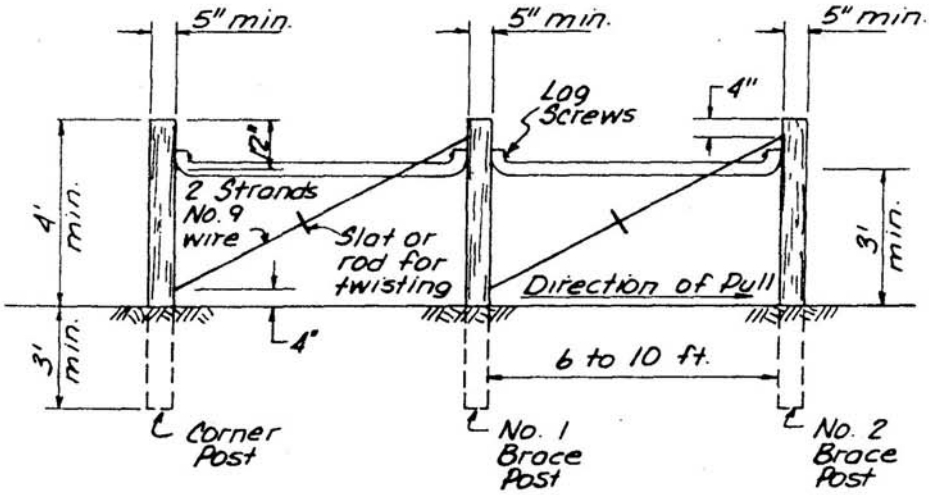

VIII. (cont.)

C. (cont.)

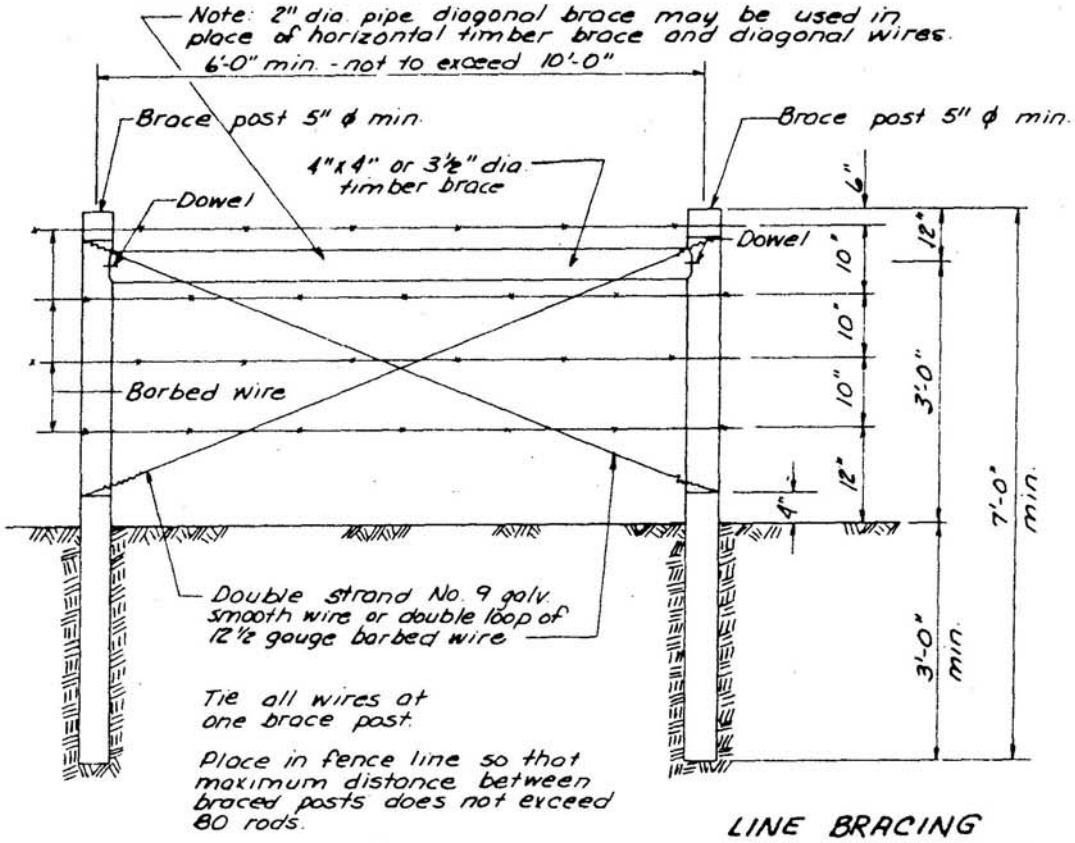

LINE BRACING

VIII. (cont.)

C. (cont.)

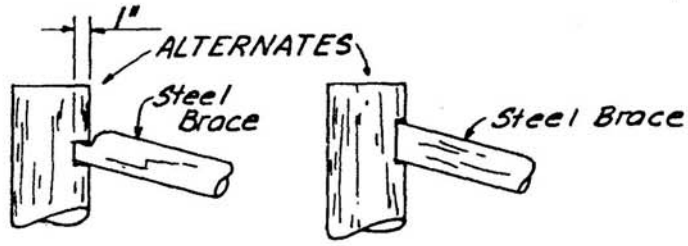

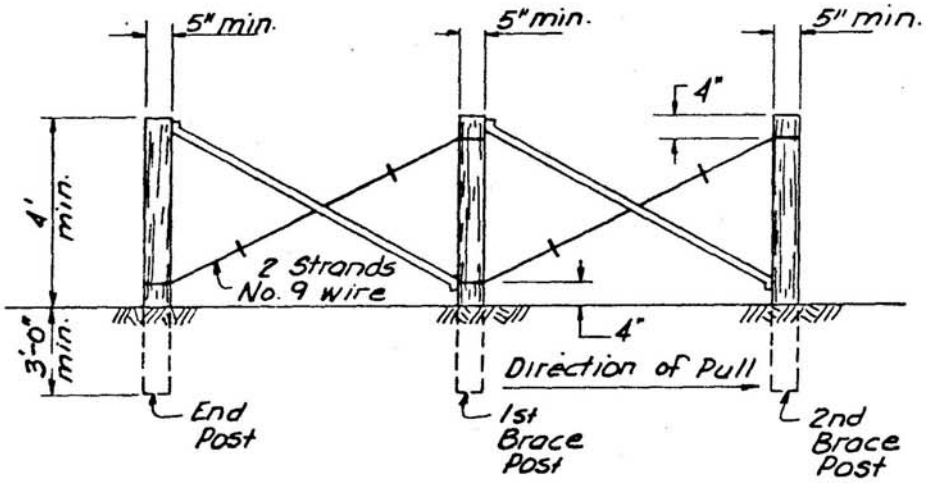

D. Deadman Brace

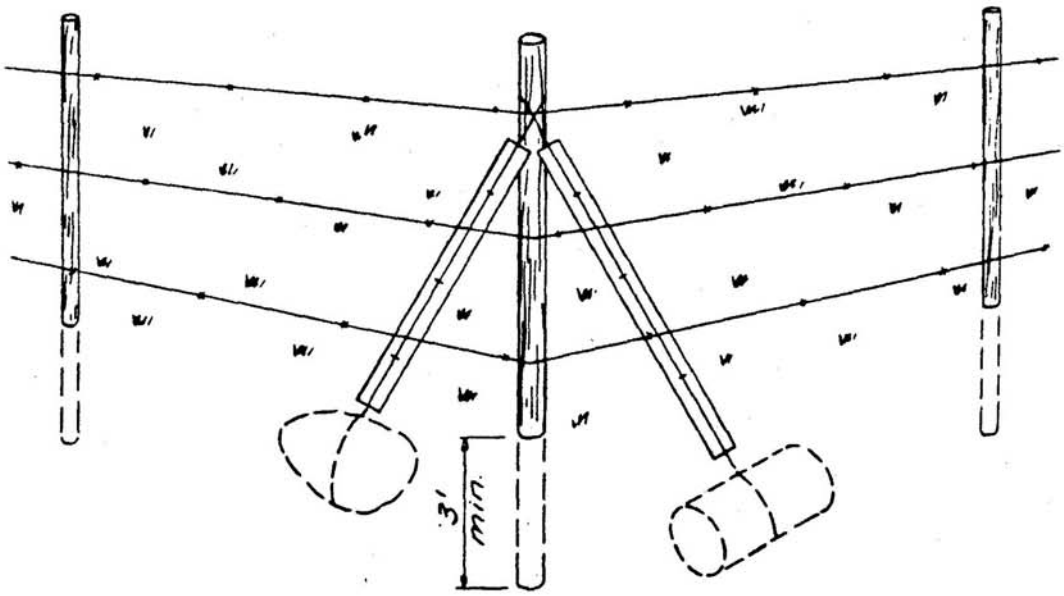

VIII. (cont.)

D. Deadman Brace

ANGLE GUY WITH DEADMAN

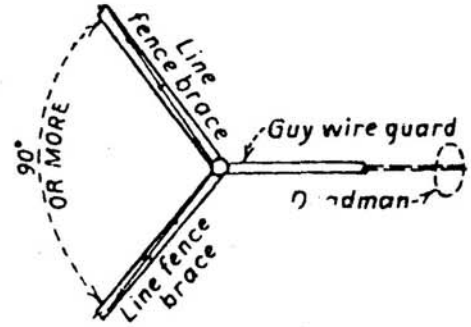

END GUY WITH DEADMAN

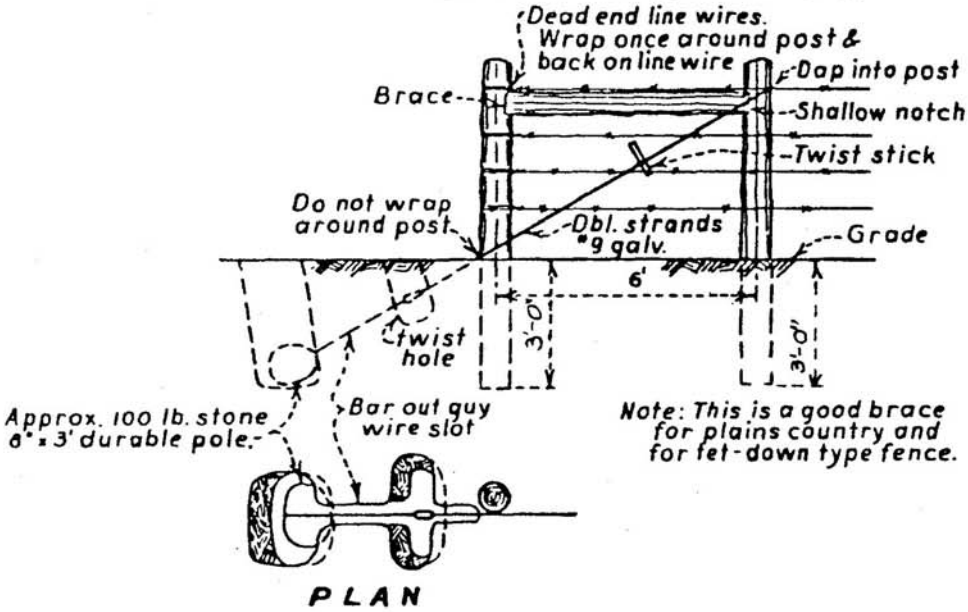

VIII. (cont.)

E. Steel brace and Corner Post Assemblies

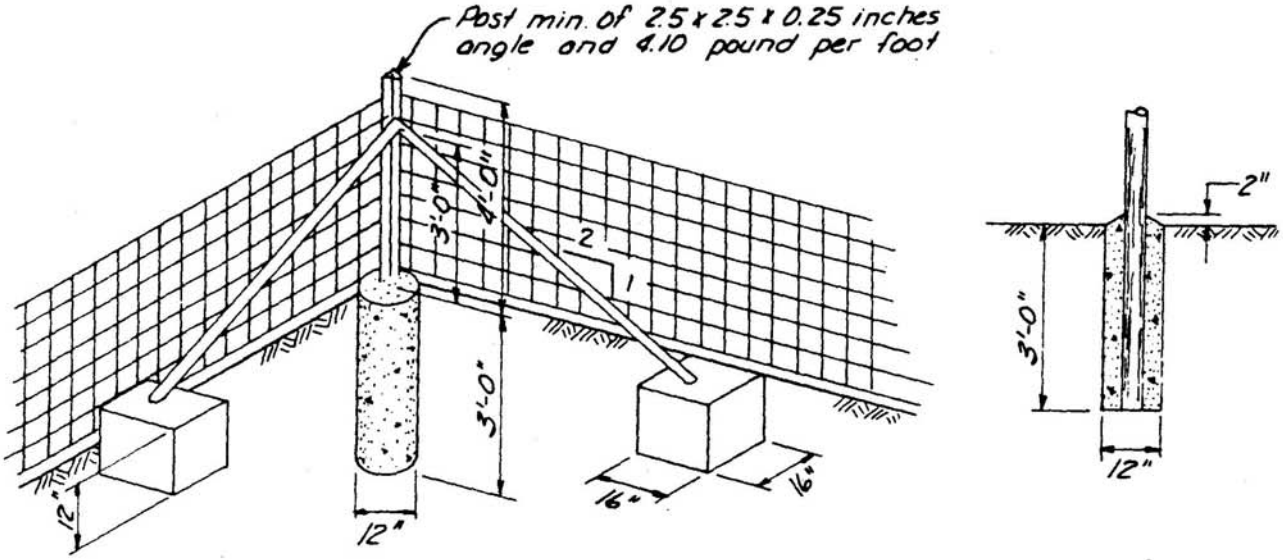

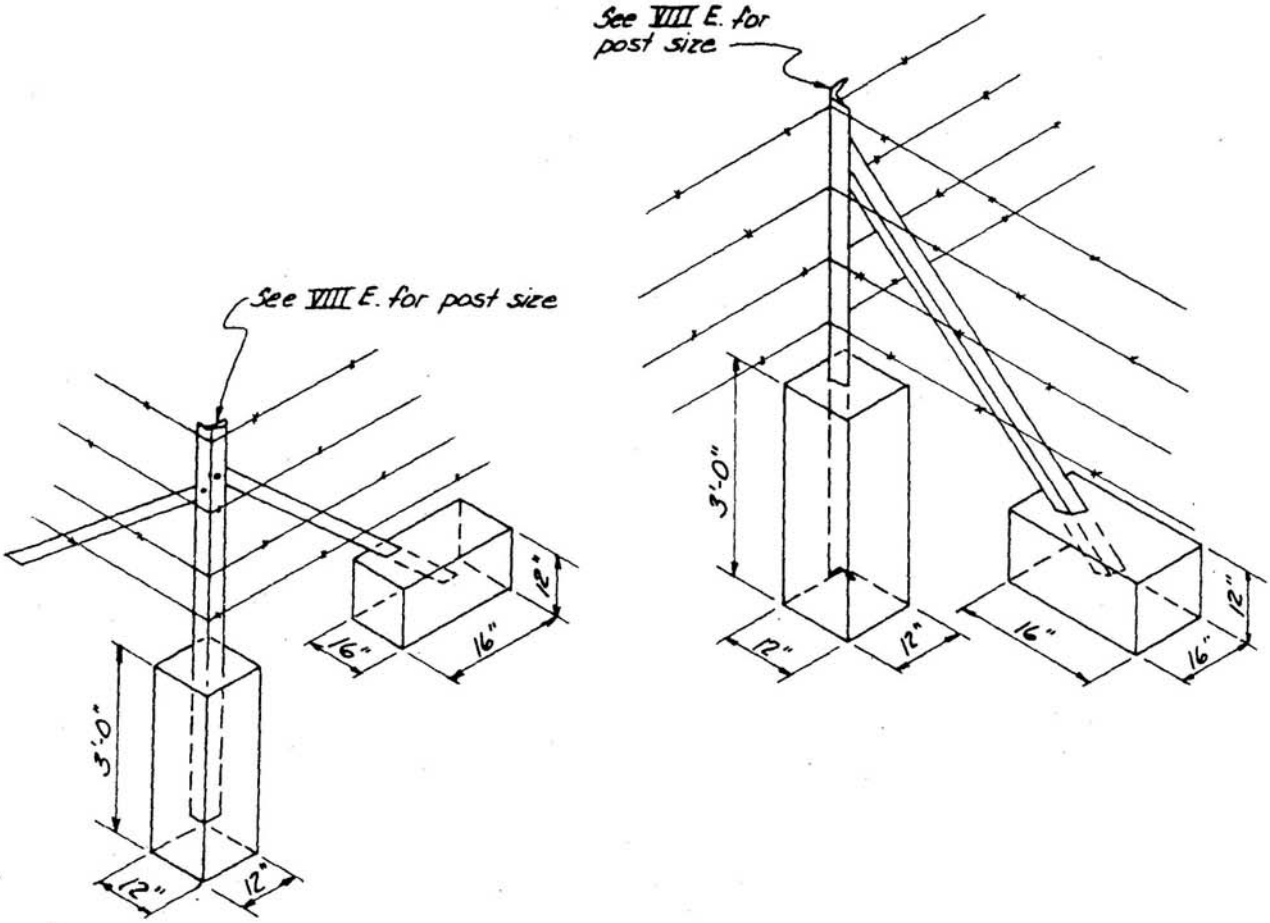

VIII. (Cont.)

E. Welded Steel Corners

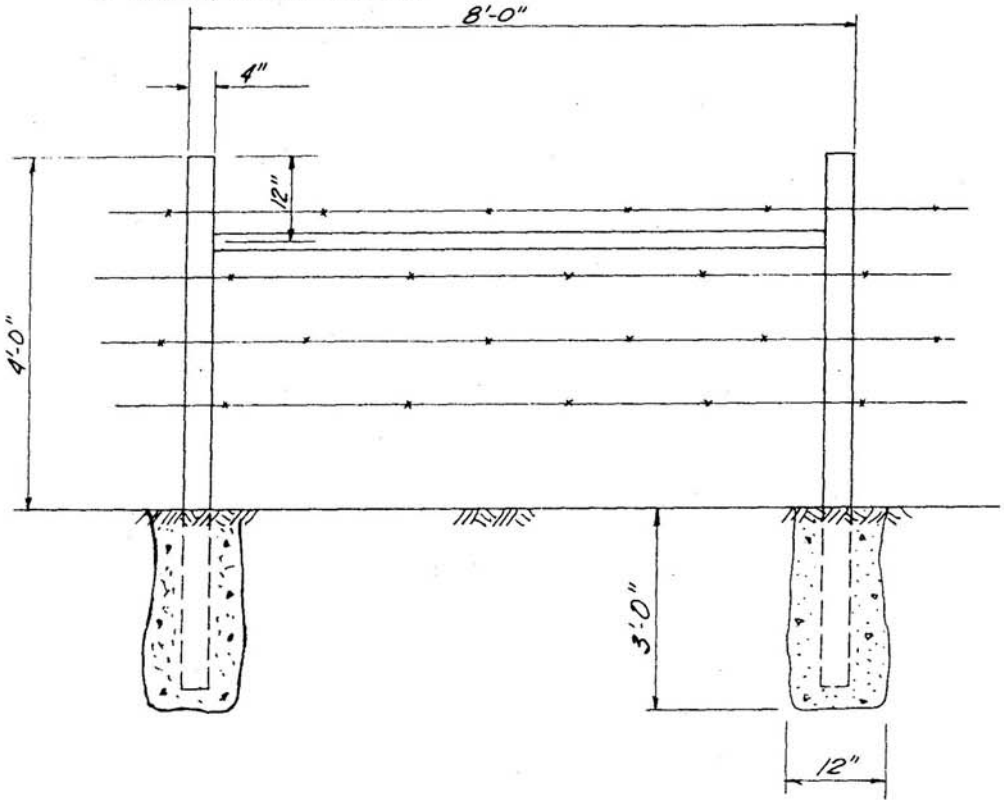

E. (Cont.) Steel fence line brace

θ	x	z
30°	21"	42"
45°	36"	51"

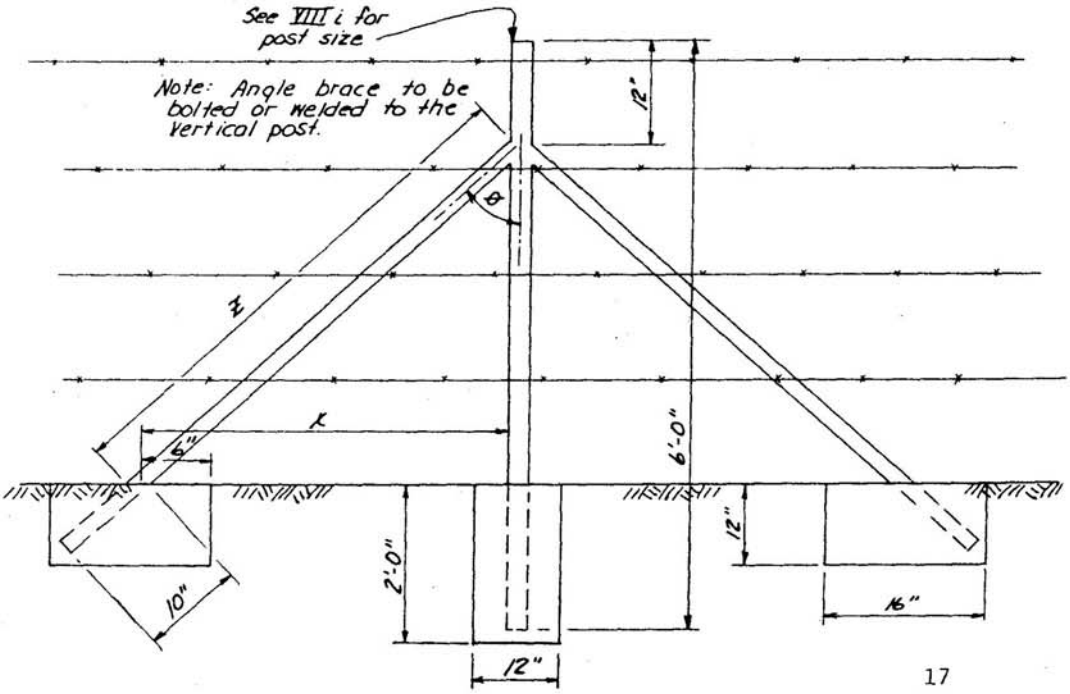

VIII. (cont.)

F. Brace for deflection angles

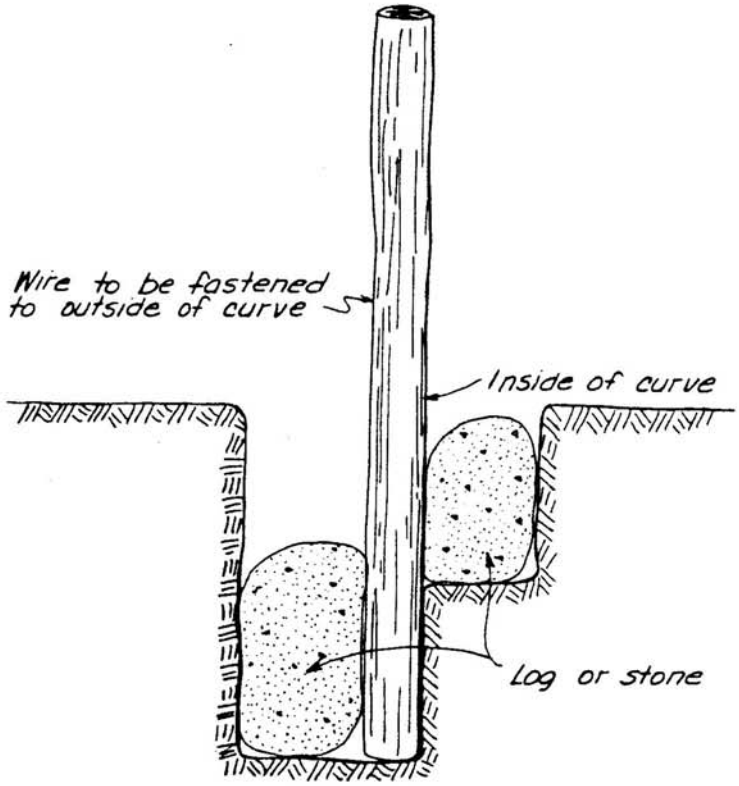

BELOW GROUND BRACING (For deflection angles 6° - 12°)

IX. Steel Posts

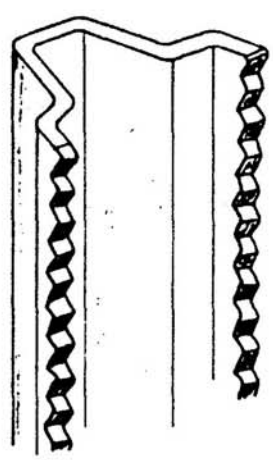

"U" BAR

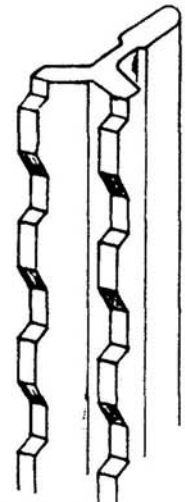

STUDDED "Y"

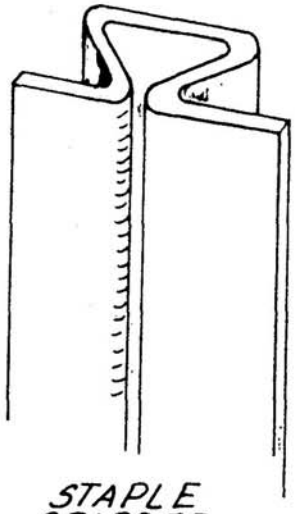

STAPLE GRIPPER

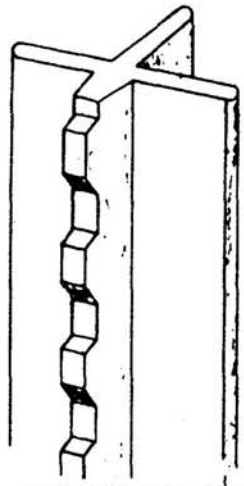

STUDDED "T"

X. Staples and Attachment of Wire

Wrap splice for splicing barbed wire

SPLICING BARBED WIRE

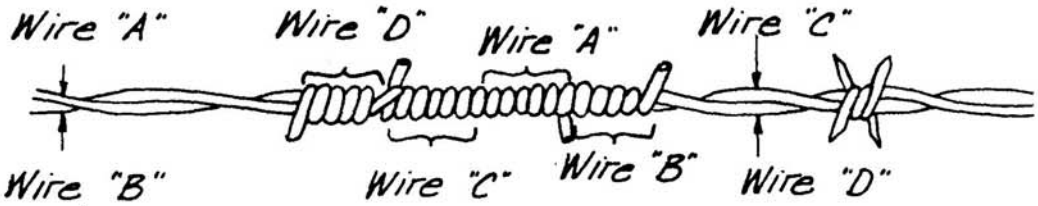

Commercial fence splice sleeves are available and will give neat, non-slipping splices. Special tools are necessary to compress the sleeve.

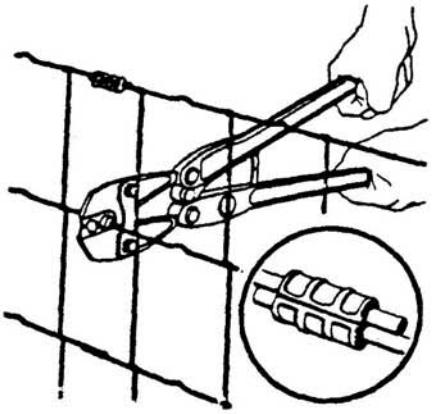

SPLICING SMOOTH WIRE "WESTERN UNION"

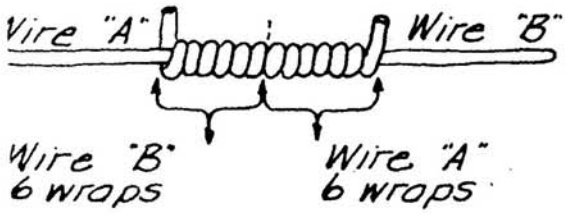

SPLICING TOOL

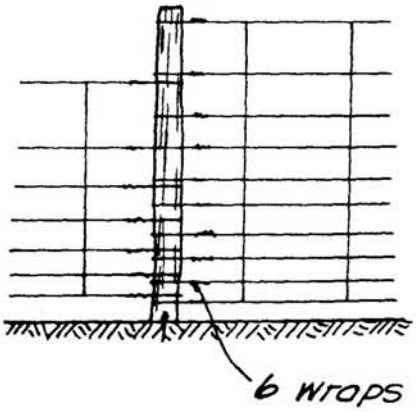

SPLICING WOVEN WIRE OF UNEQUAL HEIGHT

X. (cont.)

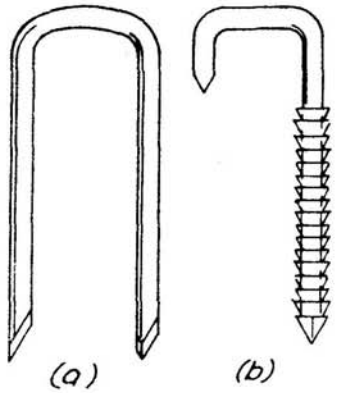

(a) U-shaped staple

(b) New L-shaped deformed shank staple

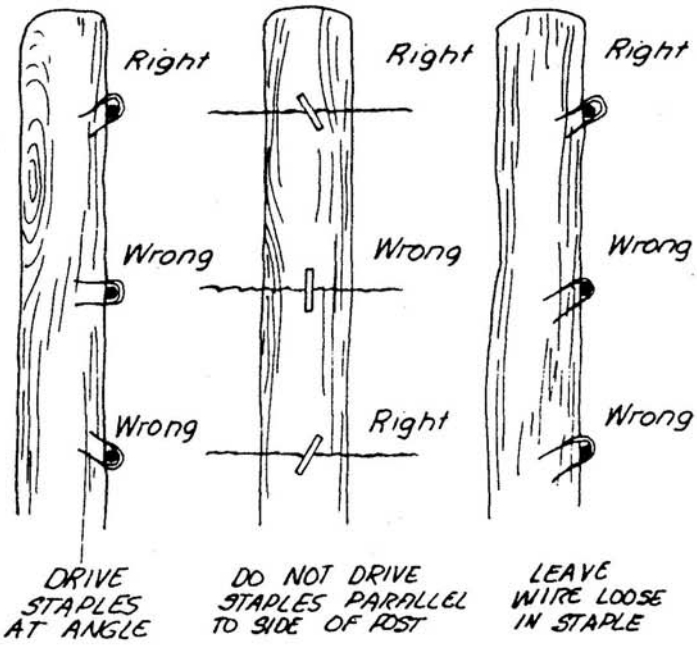

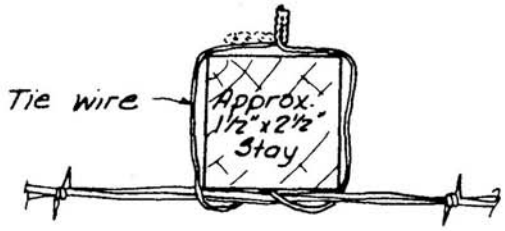

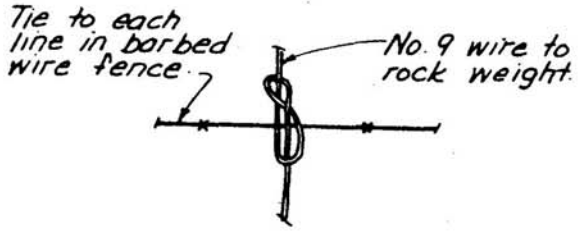

XI. Stretching Woven Wire

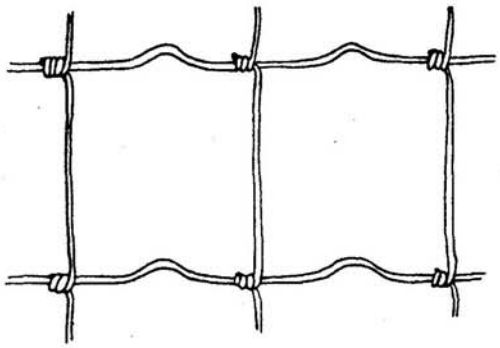

HERE'S HOW the hump looks in woven wire:

Before stretching.

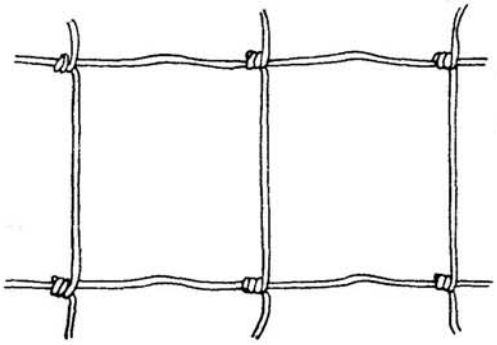

Stretched too tight.

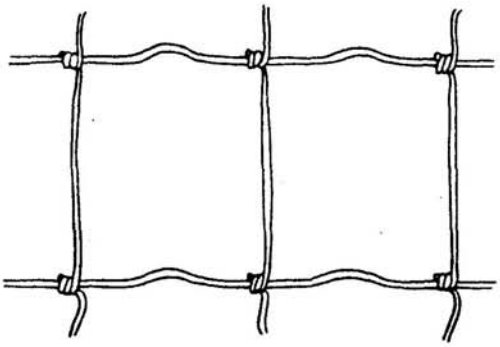

Tension curves on woven wire show when wire is properly stretched:

After proper Stretching.

XII. Line Jack Designs

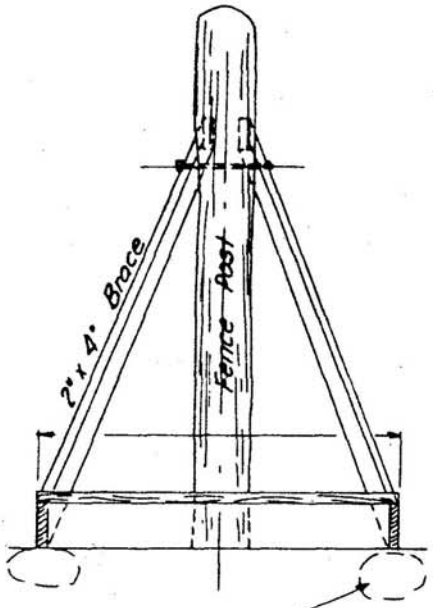

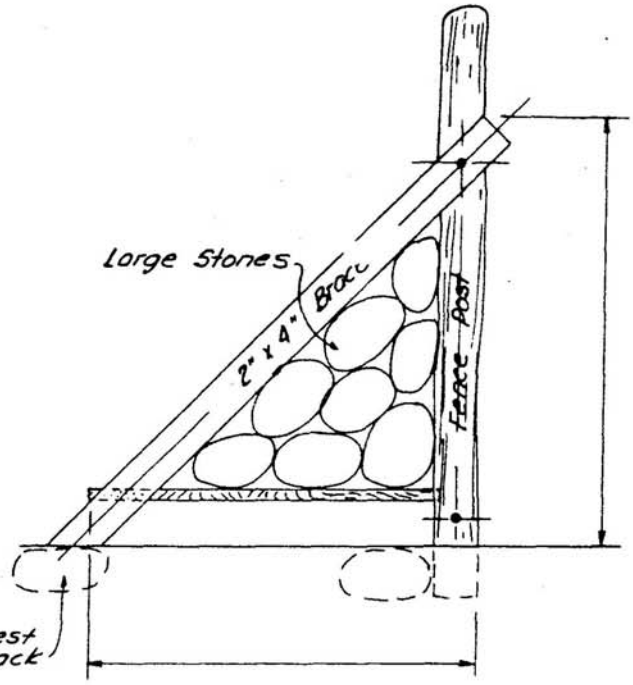

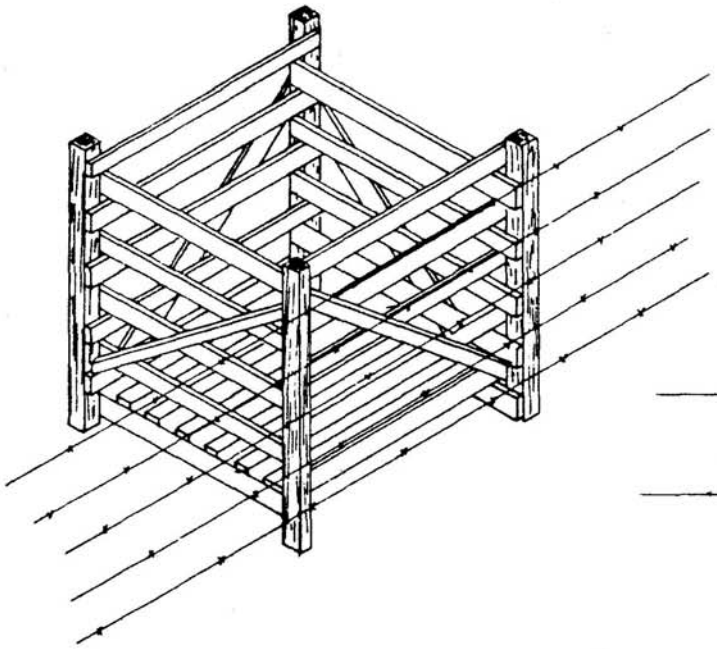

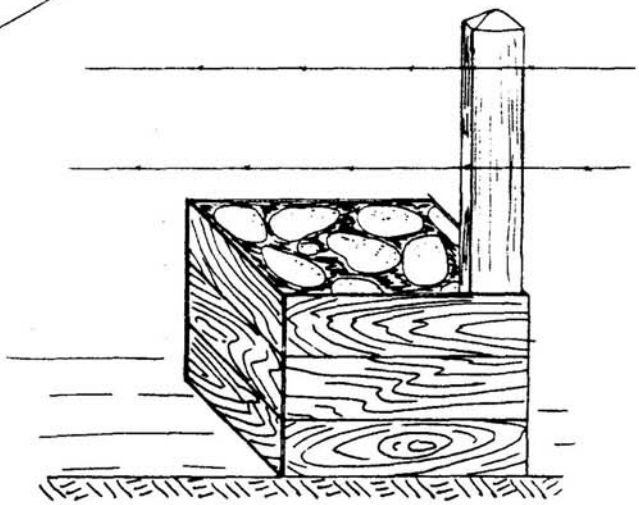

XIII. Gate Fasteners

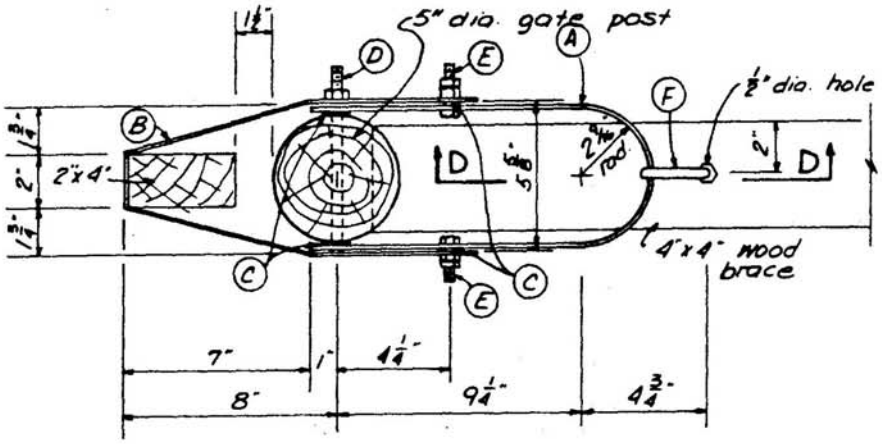

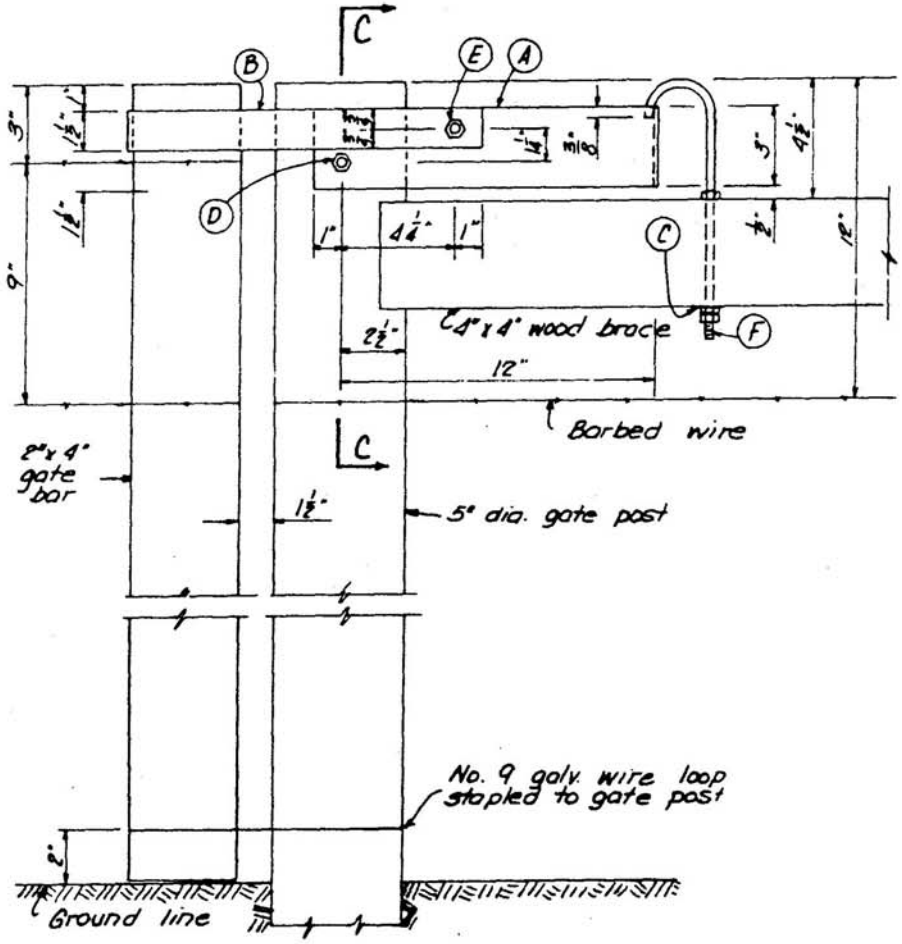

XIII. Gate Fasteners (cont.)

Top View
Lever down

Side View
Lever about half open

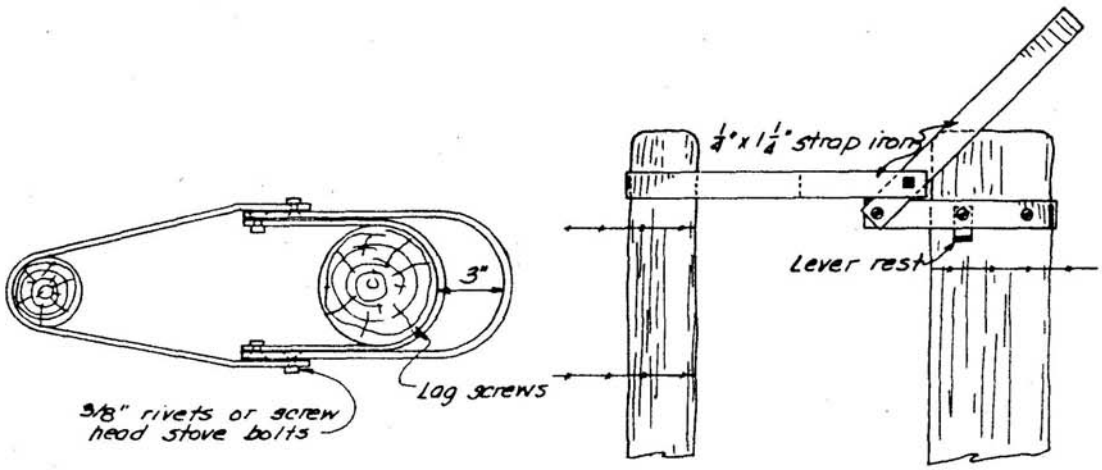

Bill of Materials

1-pc. 1/4" x 1 1/4" x 21"	2-Angle clips-1 1/2" x 1 1/2" x 1"
1-pc. 1/4" x 1 1/4" x 26"	6-3/8" screw hd. stove bolts
1-pc. 1/4" x 1 1/4" x 27"	3-Log screws-5/16" x 2"

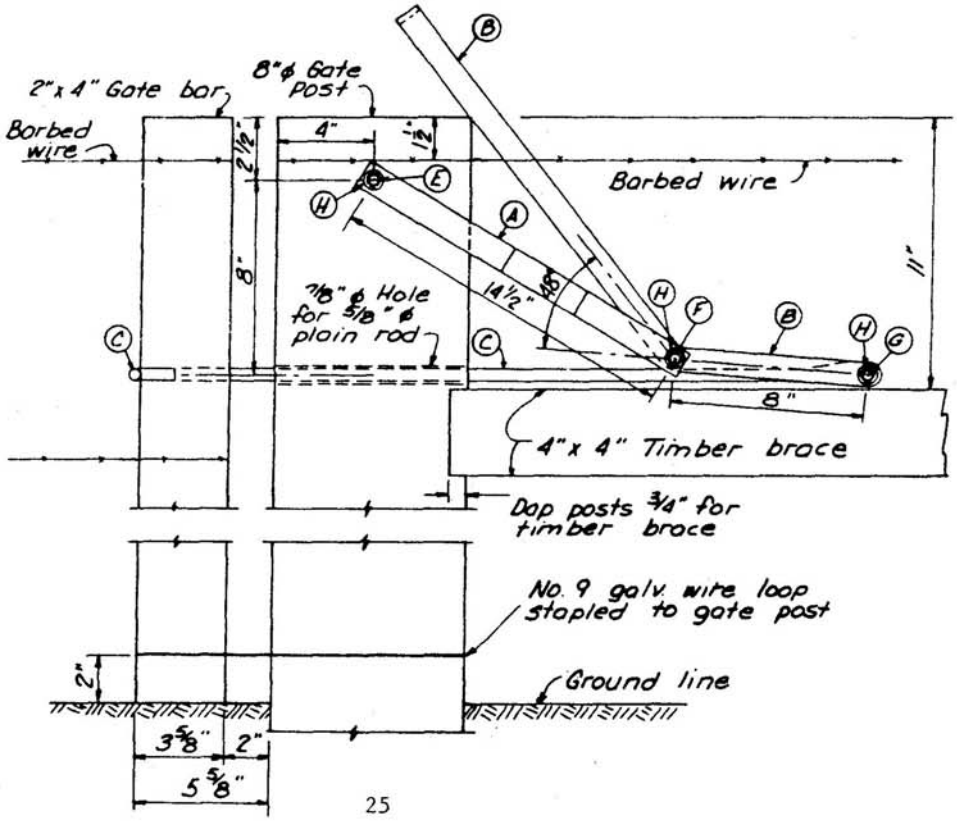

IIII. Gate Fasteners (cont.)

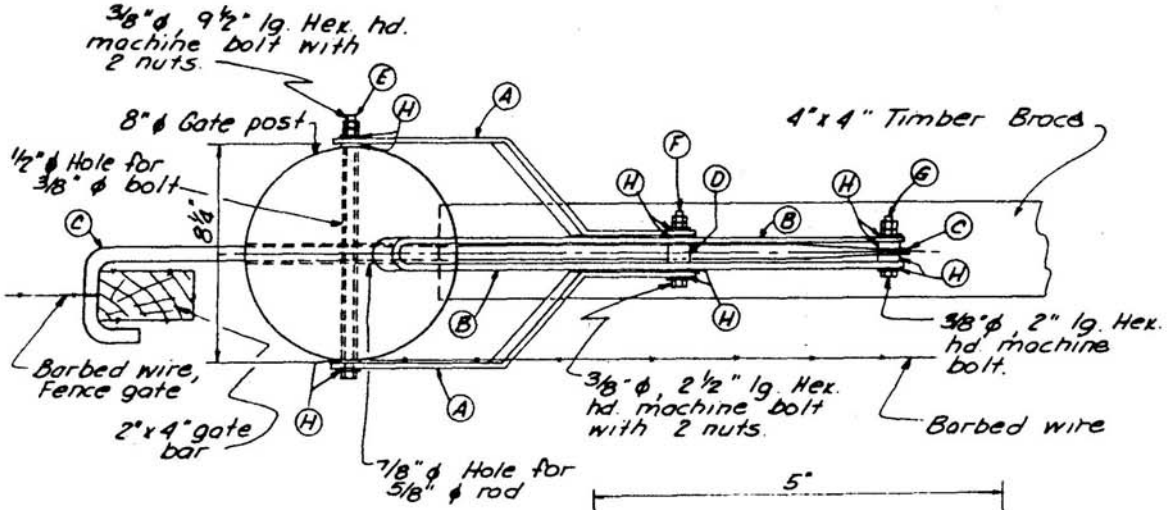

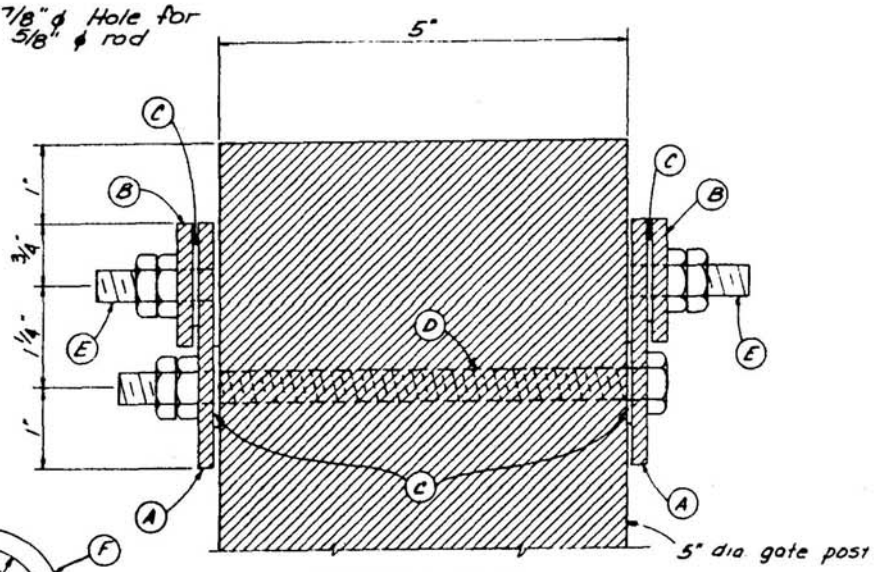

SECTION C-C

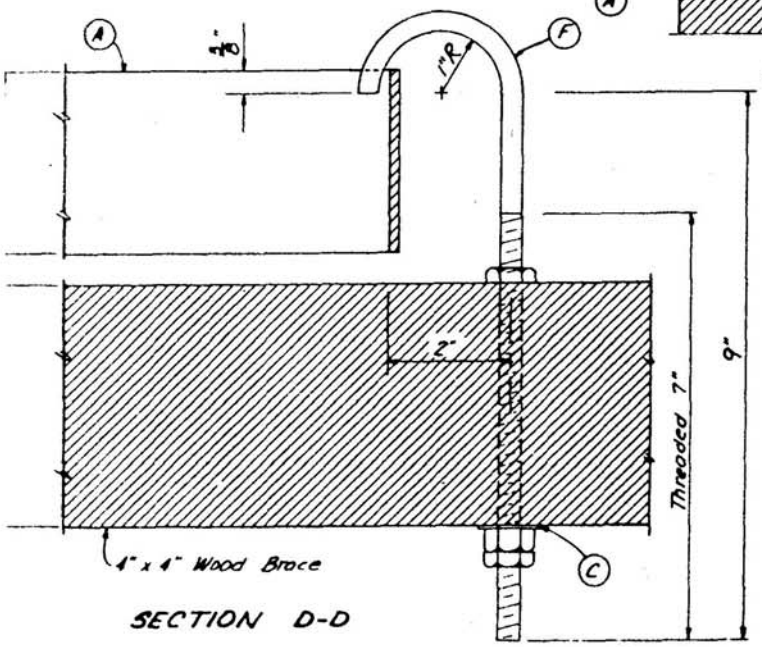

SECTION D-D

XIII. Gate Fasteners (cont.)

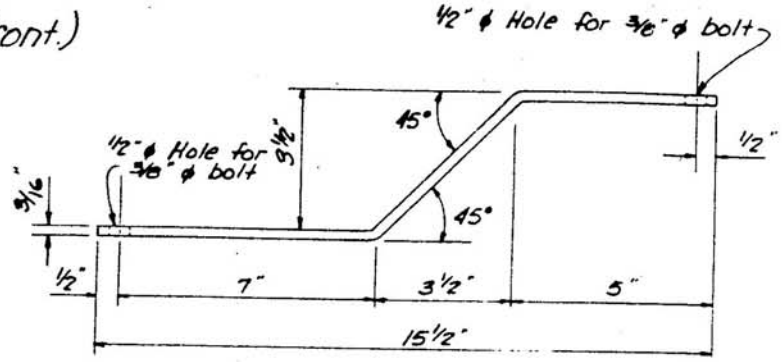

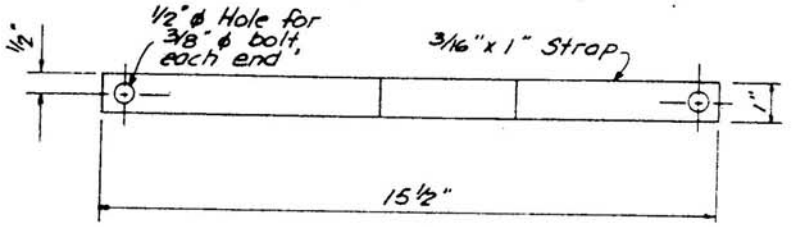

DETAIL OF ITEM (A)
(2 required)

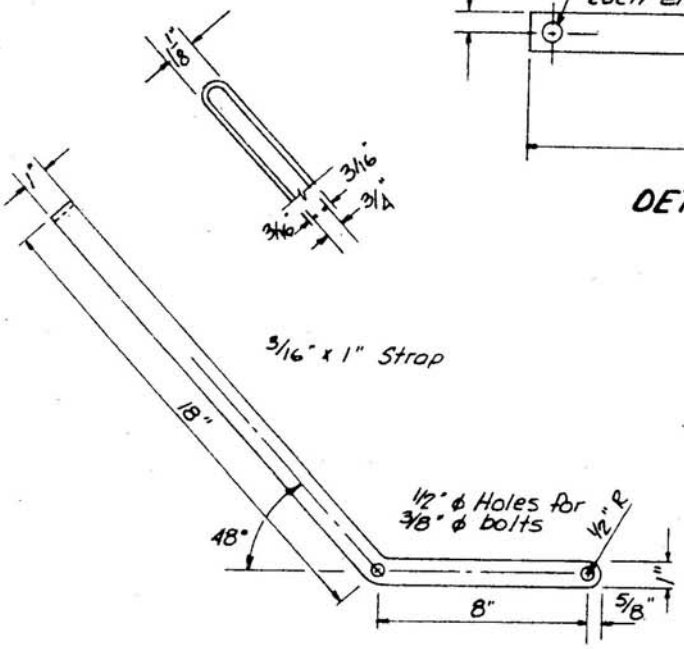

DETAIL OF ITEM (B)
(1 required)

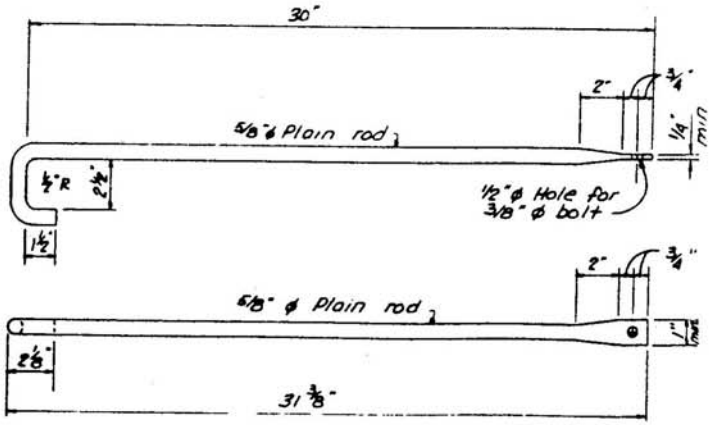

DETAIL OF ITEM (C)
(1 required)

XIV. Gate Assemblies

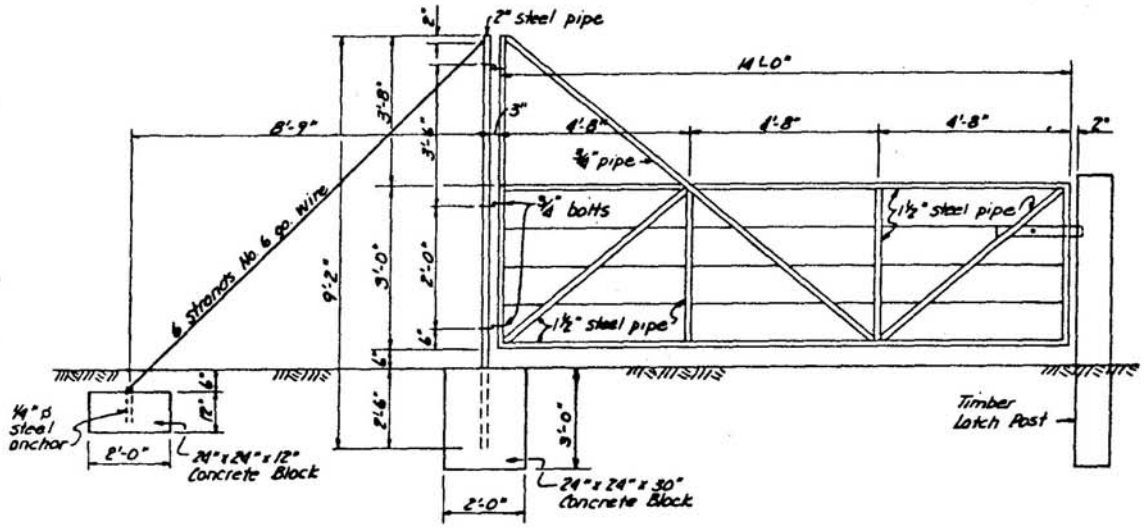

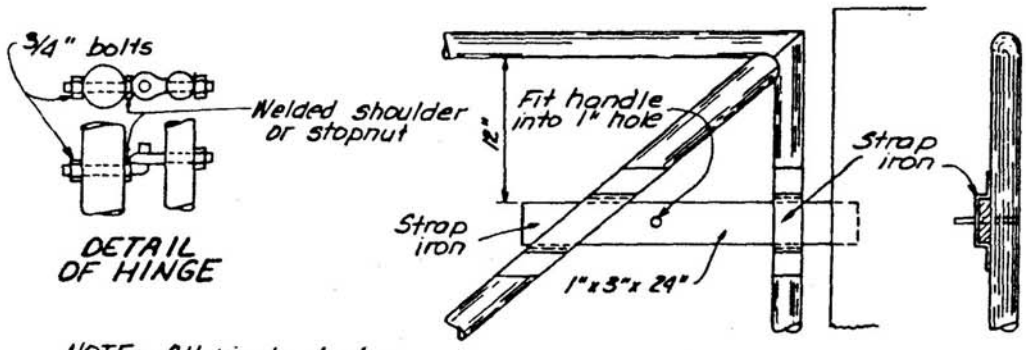

NOTE: All joints to be welded. All pipe in gate to be 1½" minimum diameter.

BILL OF MATERIAL		
1/2 yd. gravel	1 pc. 2" Steel Pipe x 10'-2"	1 pc. 1" ø Steel-6" long
1/4" sand	1 pc. 1 1/2" Steel Pipe x 7'-8"	1 " 1/4" ø " 24" "
3 sacks cement	2 " " " " x 14'-0"	2 " 1/4 x 1 1/2" Strap iron (detail)
	2 " " " " x 6'-0"	3 only Hinges (detail)
1 pc. 10" x 10" x 8'-0" S4S	3 " " " " x 4'-0"	1 " 3/4" x 3" Eyebolts
1 pc. 1" x 3" x 2' 0" S4S	1 " " " " x 12'-0"	75 ft. 6 ga. wire

XIV. Gate Assemblies (cont.)

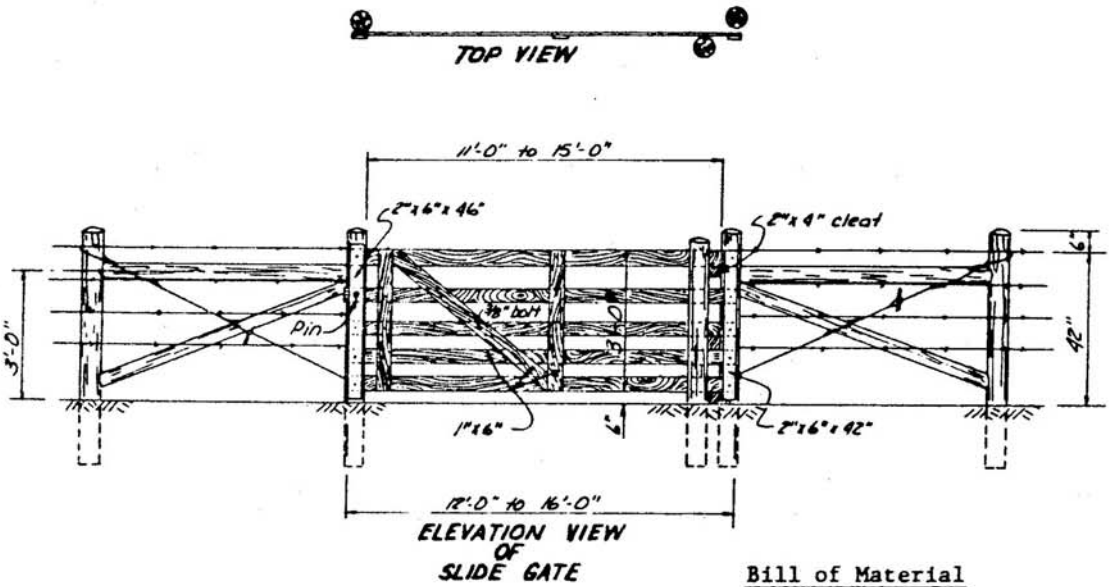

ELEVATION VIEW OF SLIDE GATE

Bill of Material

1	pc. 2" x 6" x 5' #2 Com.
2	pc. 1" x 6" x 10" #2 Com.
3-4	pc. 1" x 4" x 12'-16' #2 Com.
20	3/8" x 2½" carriage bolts
20	3/8" washers

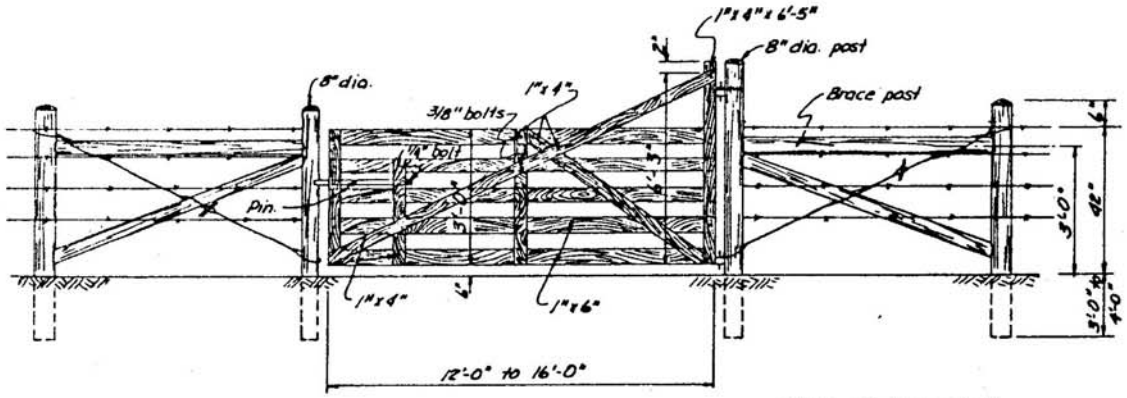

ELEVATION VIEW OF HINGED GATE

Bill of Material

1	pc. 3" x 4" x 8' #2 Com.
2	pc. 1" x 6" x 12'-16' #2 Com.
4	pc. 1" x 4" x 12'-16' #2 Com.
1	pc. 1" x 4" x 14'-18' #2 Com.
1	pc. 1" x 4" x 14' #2 Com.
2	pc. 1" x 4" x 12' #2 Com.
30	3/8" x 3" carriage bolts
1	¼" x 3" carriage bolts
30	3/8" cut washers
2	¼" cut washers
1	pr. gate hinges

IV. Gate Assemblies (cont.)

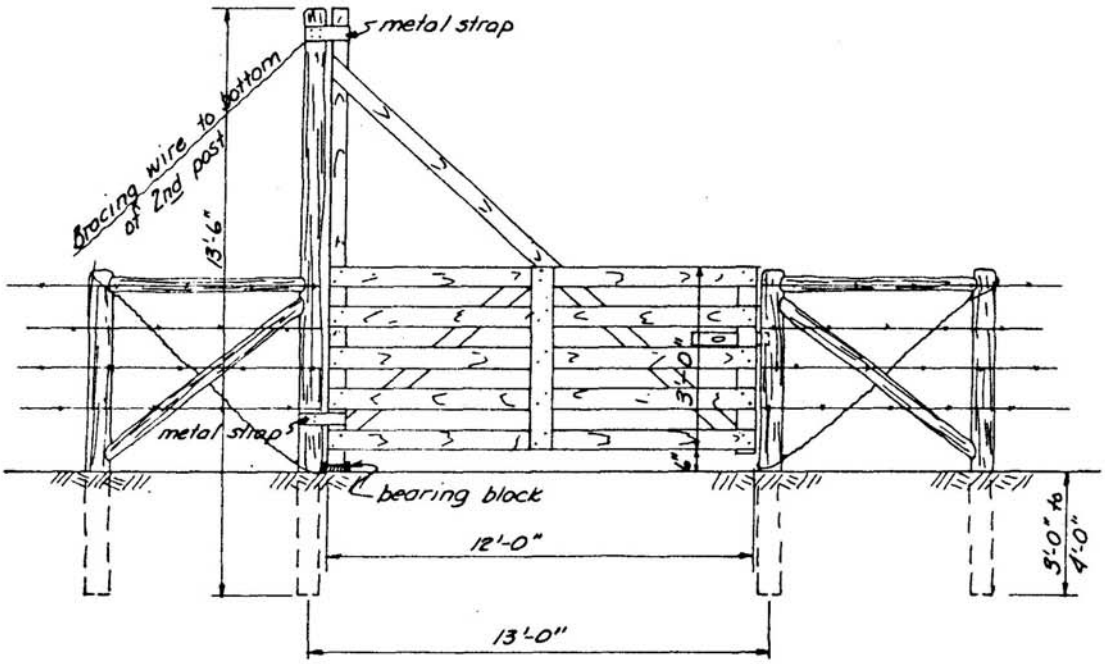

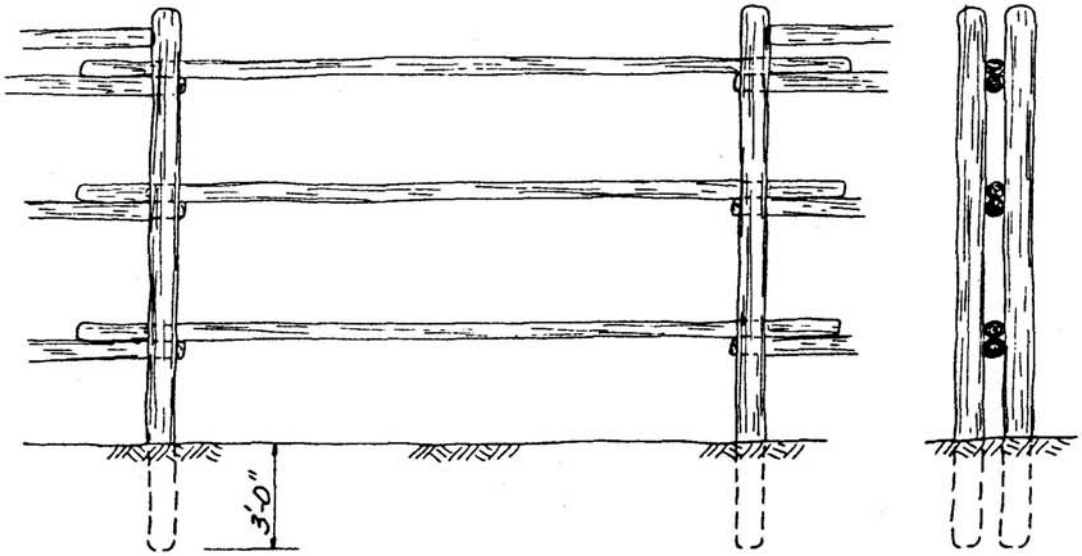

XIV. Gate Assemblies (cont.)

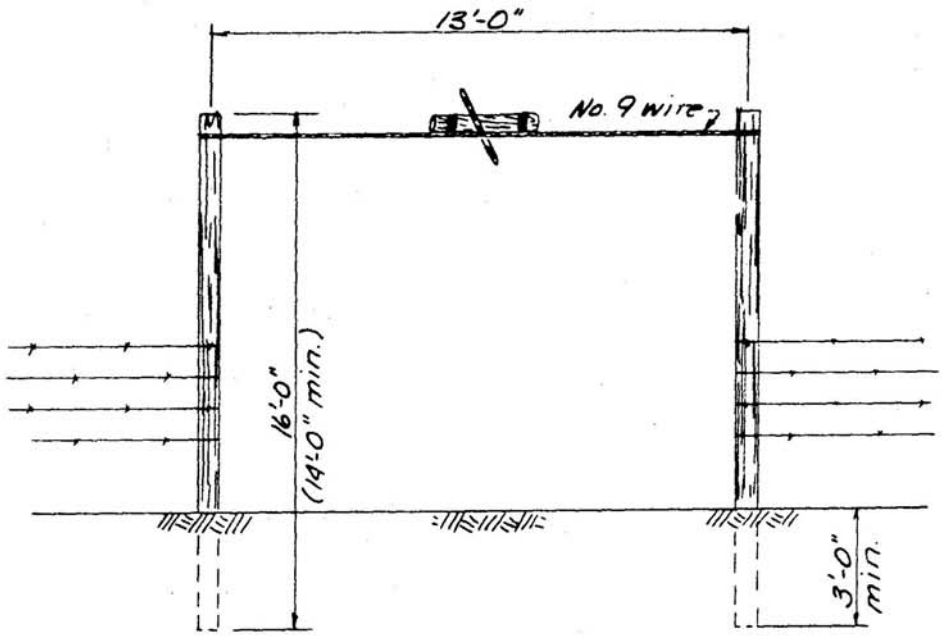

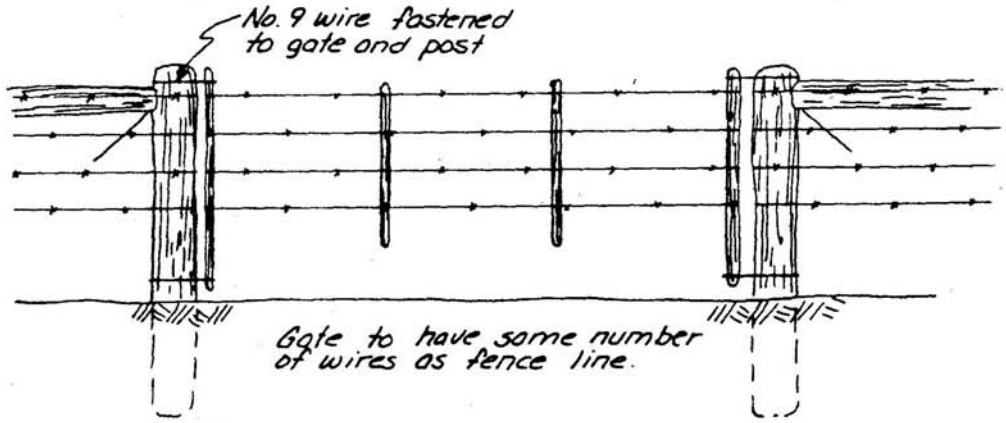

IV. Cattleguard Assemblies

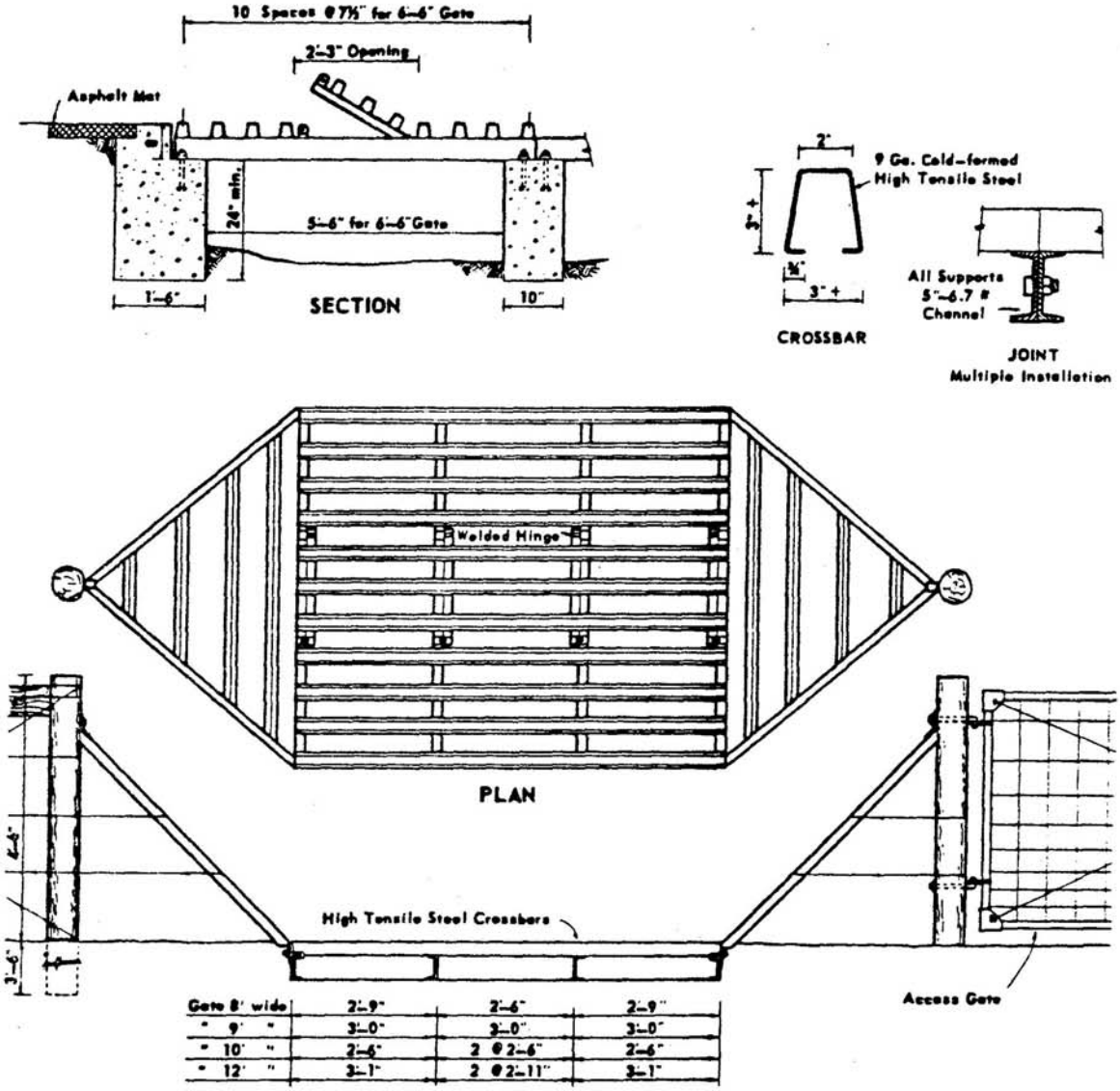

Gate 8' wide	2'-9"	2'-6"	2'-9"
" 9' "	3'-0"	3'-0"	3'-0"
" 10' "	2'-6"	2 @ 2'-6"	2'-6"
" 12' "	3'-1"	2 @ 2'-11"	3'-1"

ELEVATION

A standard device essential in areas where open range country is adjacent to park access roads or where areas must be divided into grazing and non-grazing sections. An access gate, for controlled animal passage, may be provided in the fence which adjoins this cattleguard.

A portion of the grill is made removable so that the space beneath may be kept clean of debris. Railroad rails may be used as crossbars, if they are available.

XV. Cattleguard Assemblies

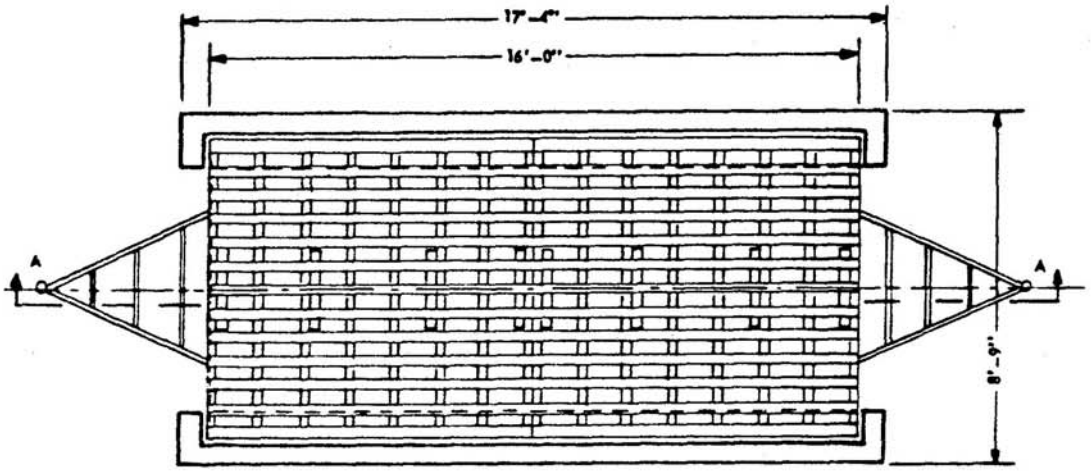

PLAN

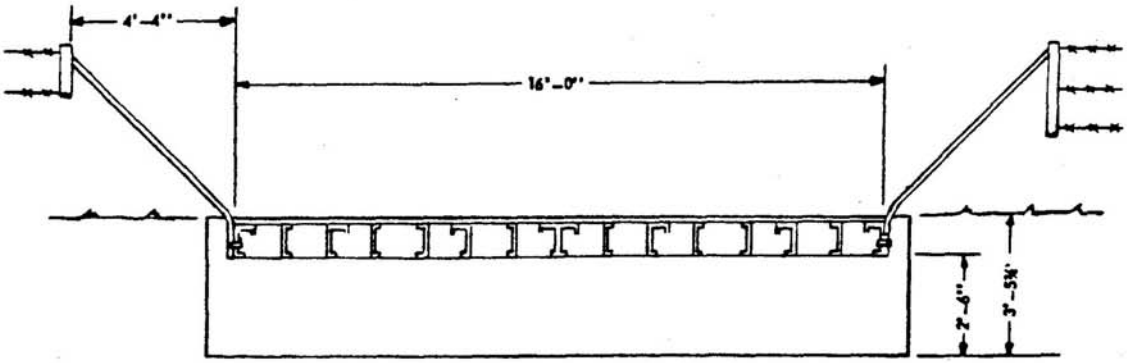

SECTION A – A

A sound design for a boundary line cattle guard. Pit should be well drained; section of decking should be removable to permit periodic cleaning. A standard gate might be installed in the abutting fence to the right or left of the guard to permit controlled passage of animals.

Railroad rails or heavy pipe may also be used as cattle guard decking.

IV. Cattleguard Assemblies (cont.)

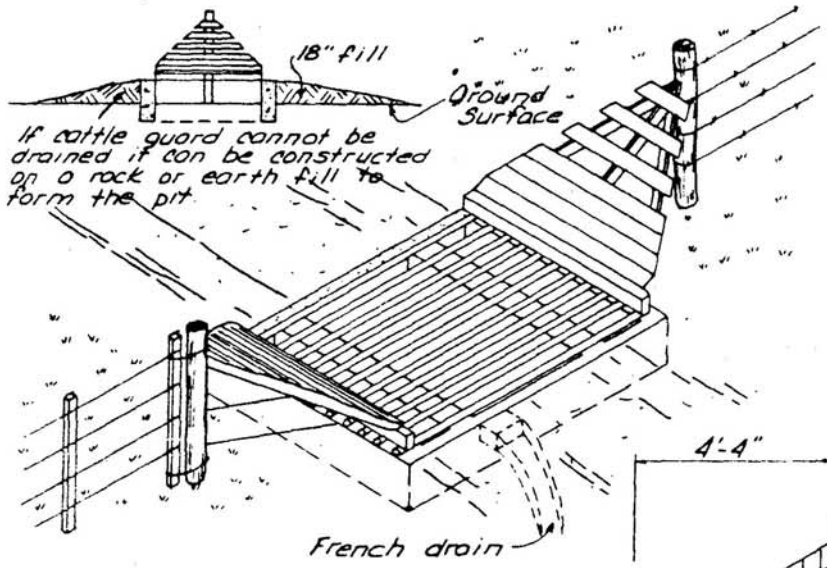

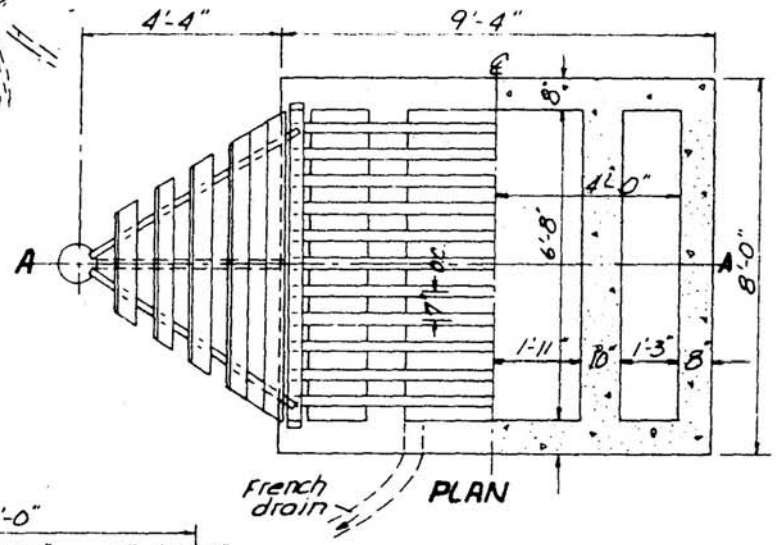

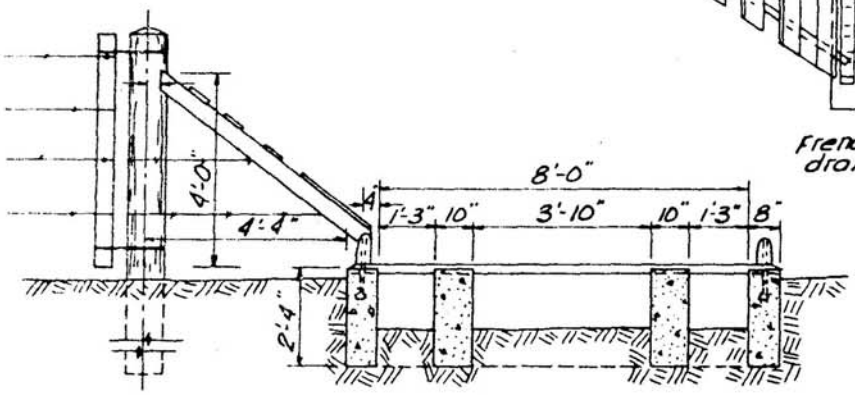

SECTION A-A

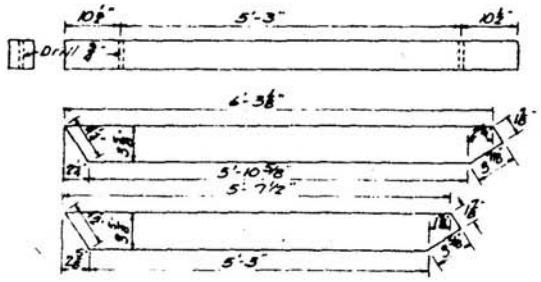

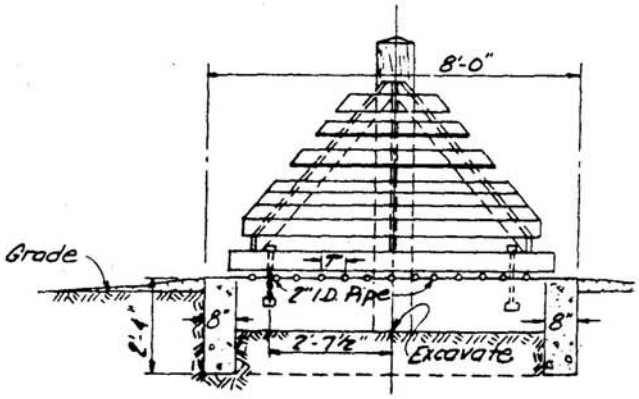

SECTION AT ℄ OF ROAD

IV Cattleguard Assemblies (cont.)

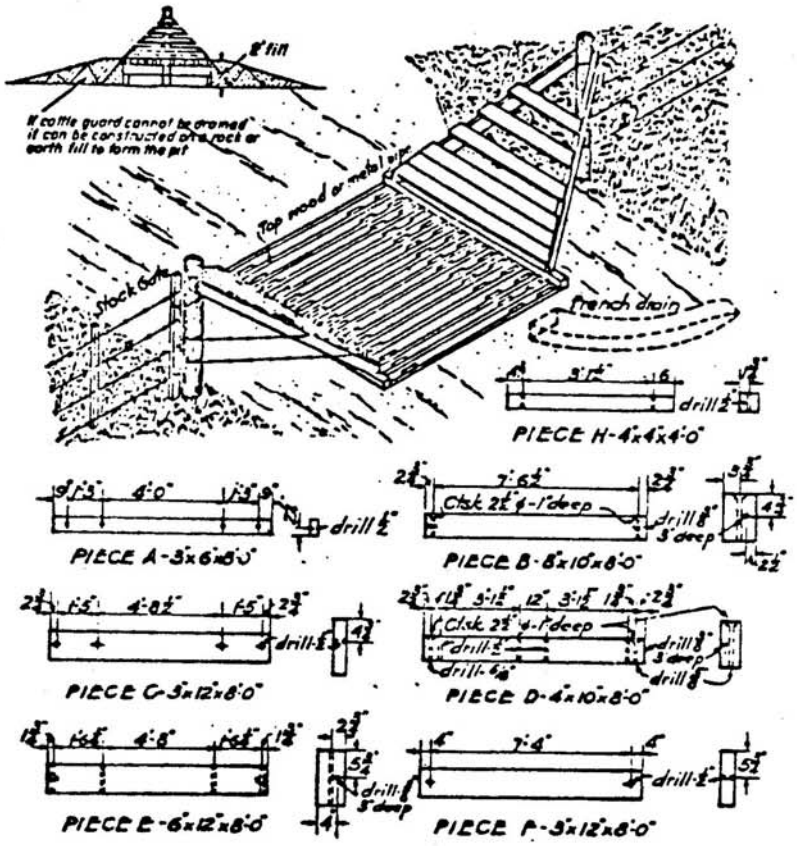

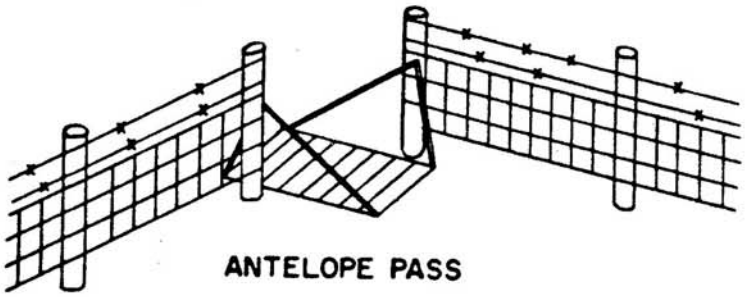

ANTELOPE PASS

Antelope pass is half of a normal cattle guard and should be located in a fence corner or offset.

XVI Buck & Pole Fence Design

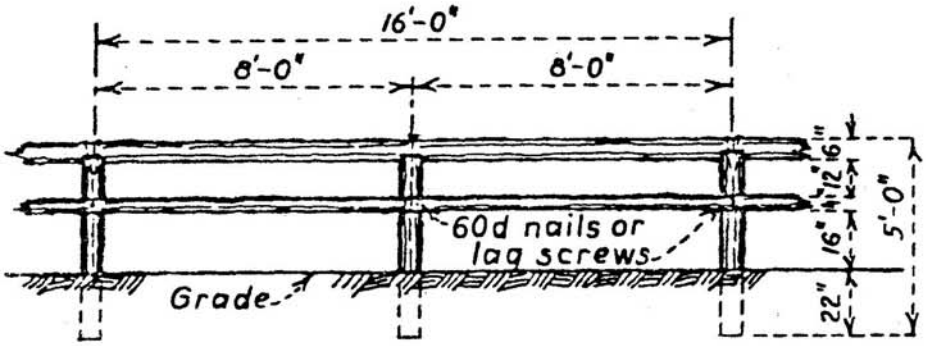

POST & POLE

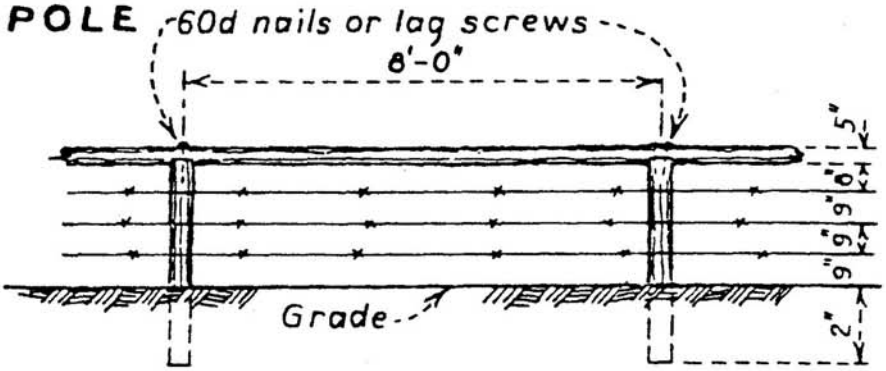

POLE & WIRE

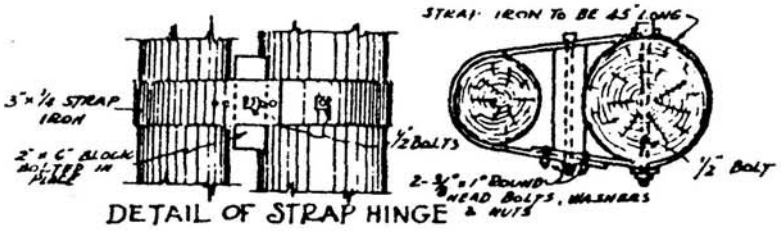

DETAIL OF STRAP HINGE

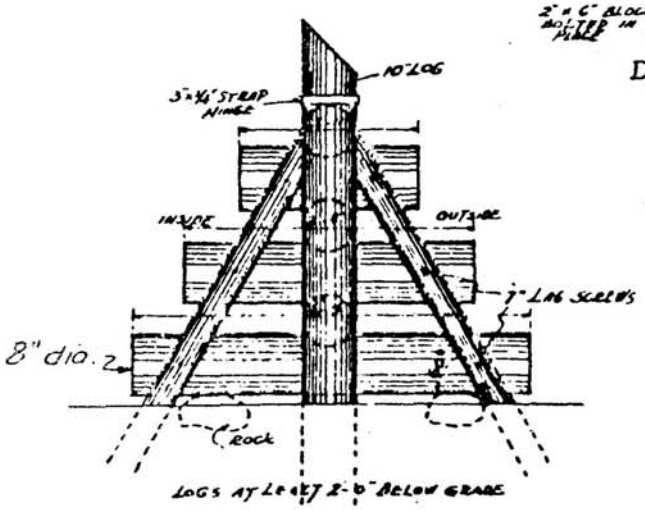

SIDE VIEW

SECTION A-A

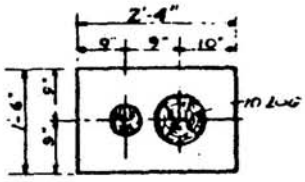

PLAN
CONCRETE FOOTING

XVI (cont.)

Buck & Barbed Wire Fence

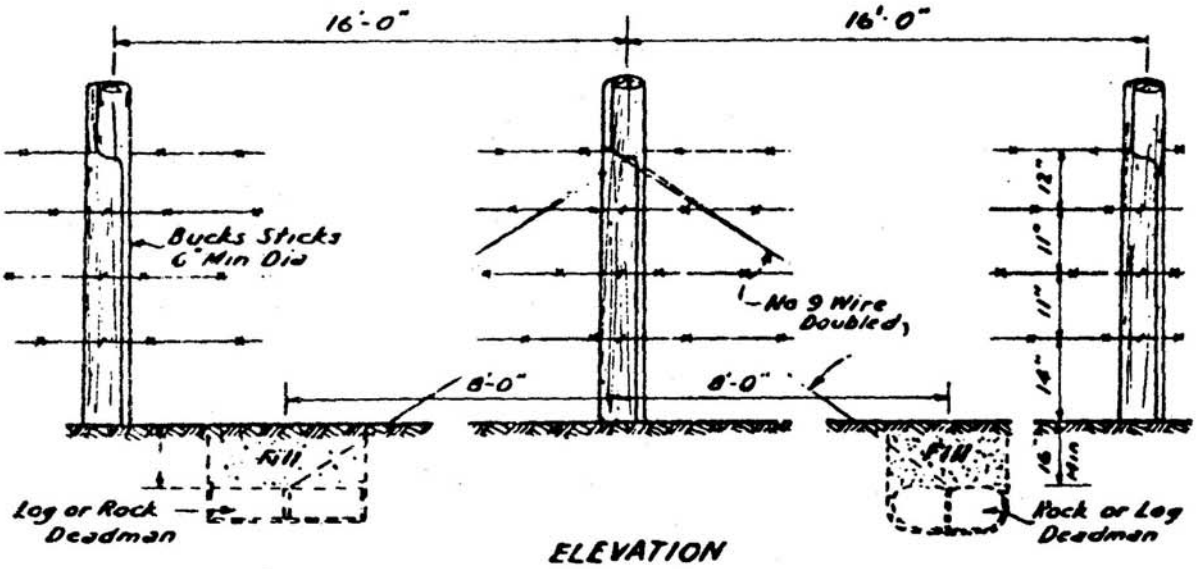

ELEVATION

NOTE: Put Guy Wires on every 10th buck on level ground and every 5th buck on steep ground

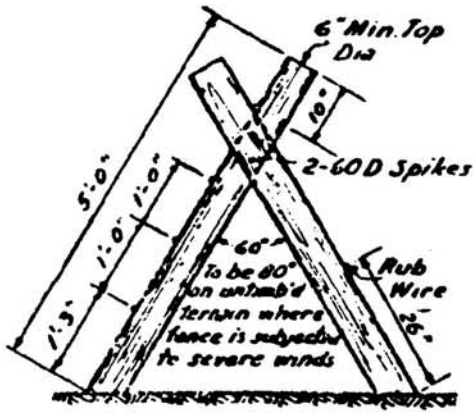

SECTION SHOWING
DETAIL OF BUCKS

XVI (Cont.)

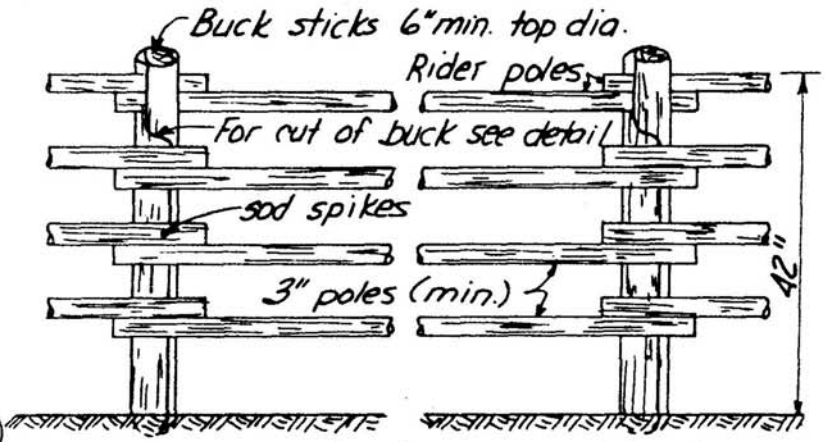

Elevation showing poles & bucks

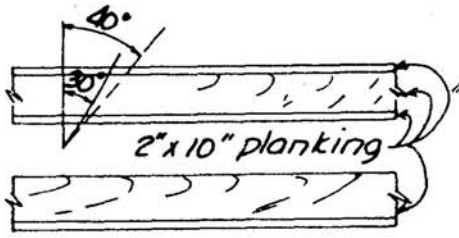

Detail of miter box for cutting buck sticks

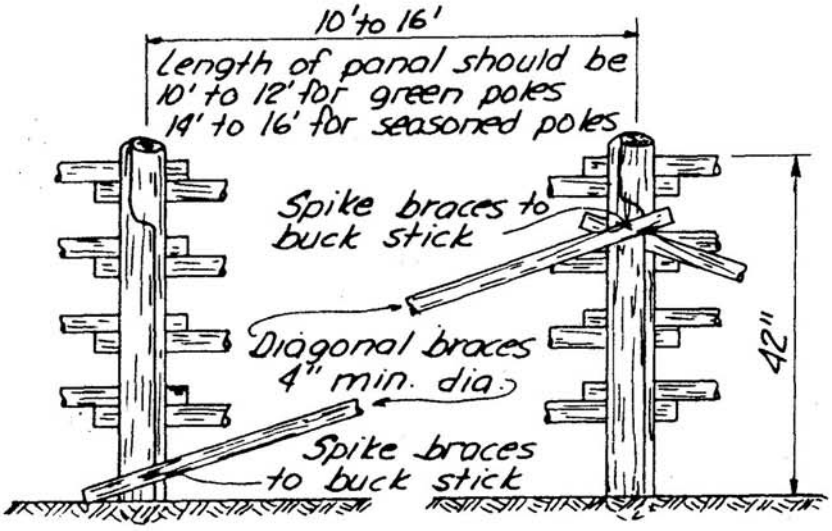

Elevation showing diagonal bracing
Note: Double brace every tenth buck.

MATERIALS

Poles and bucks to be peeled or stripped on 3 sides, be sound and free of knots. Min. top dia. of poles 3", of braces 4", and of buck sticks 6". Buck sticks to be mortised to provide tight joint.

XVI (cont.)

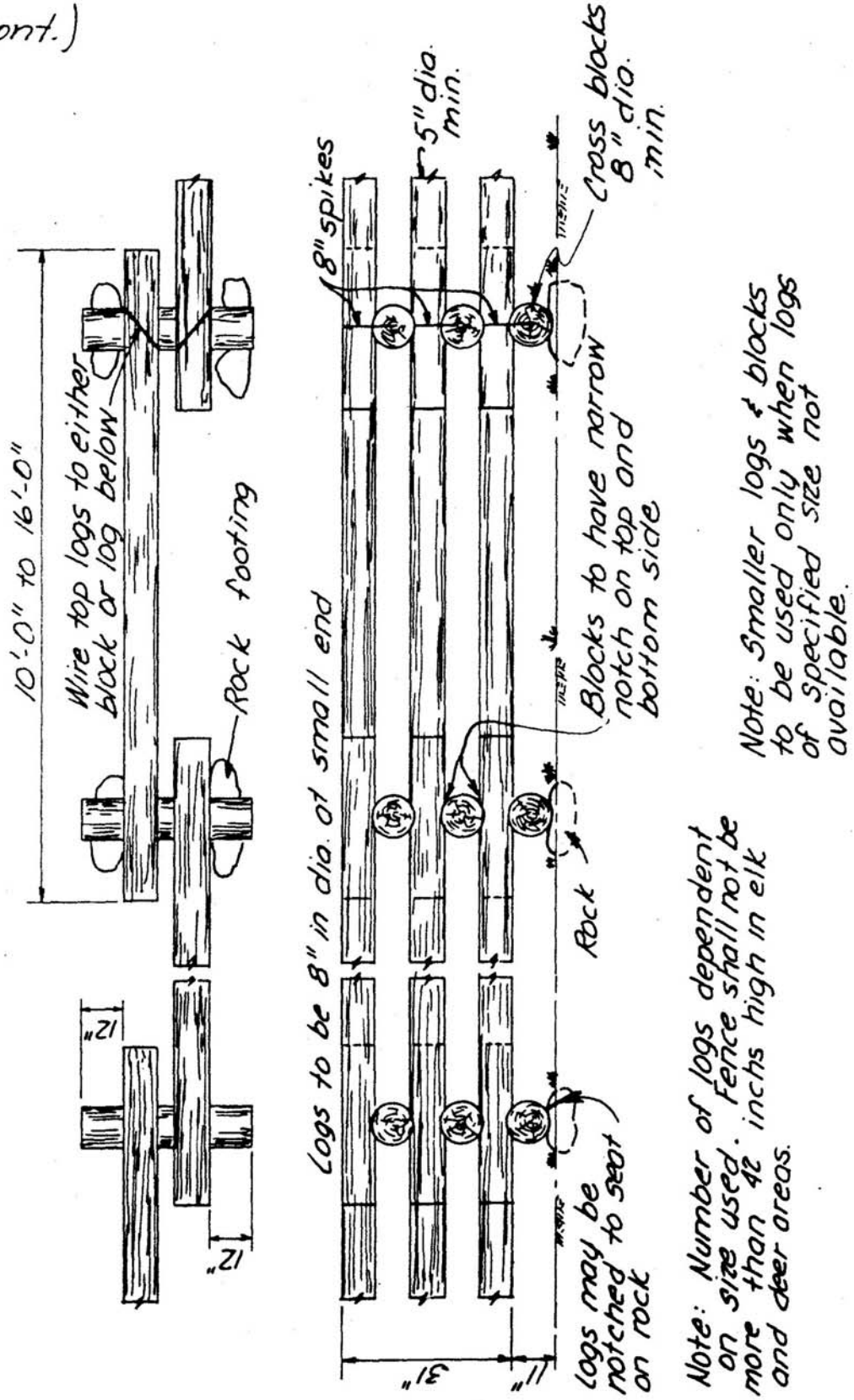
10'-0" to 16'-0"
Wire top logs to either block or log below
Rock footing
12"
12"
8" spikes
5" dia. min.
Cross blocks 8" dia. min.
Blocks to have narrow notch on top and bottom side
Logs to be 8" in dia. or small end
Rock
Logs may be notched to seat on rock
31"
11"
Note: Smaller logs & blocks to be used only when logs of specified size not available.
Note: Number of logs dependent on size used. Fence shall not be more than 42 inchs high in elk and deer areas.

XVI. (cont.)

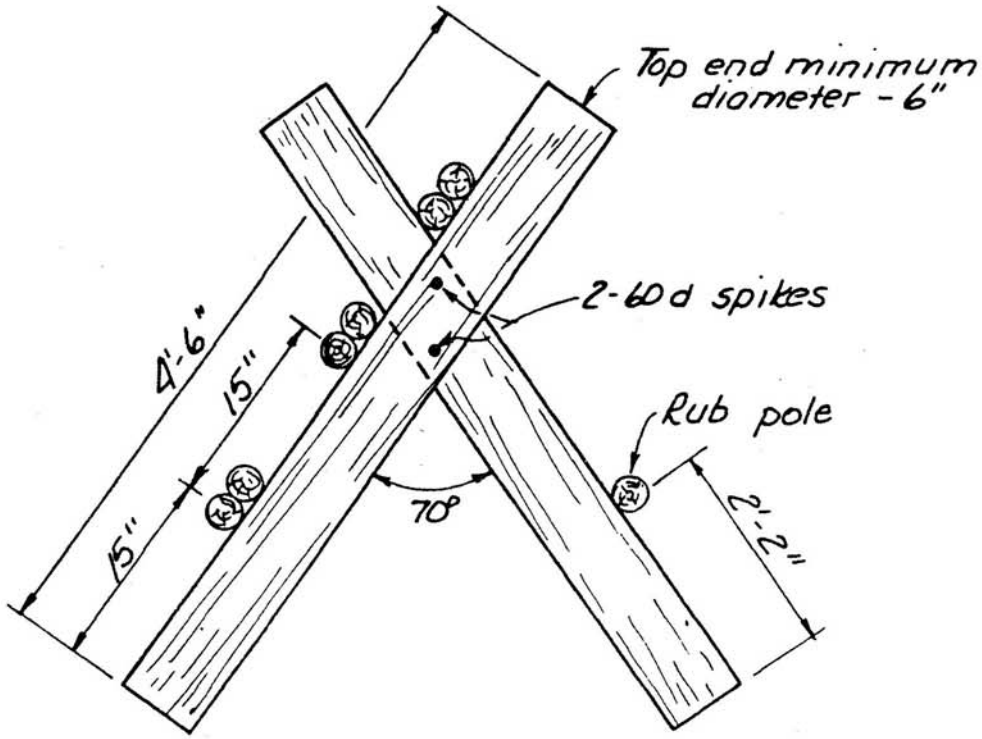

Angle of buck should not be less than 60°. Angle should be 80° on untimbered terrain where fence will be subjected to high winds.

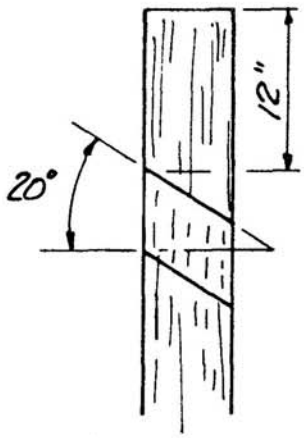

Note:
Both buck sticks to be cut the same

XVI (cont.)

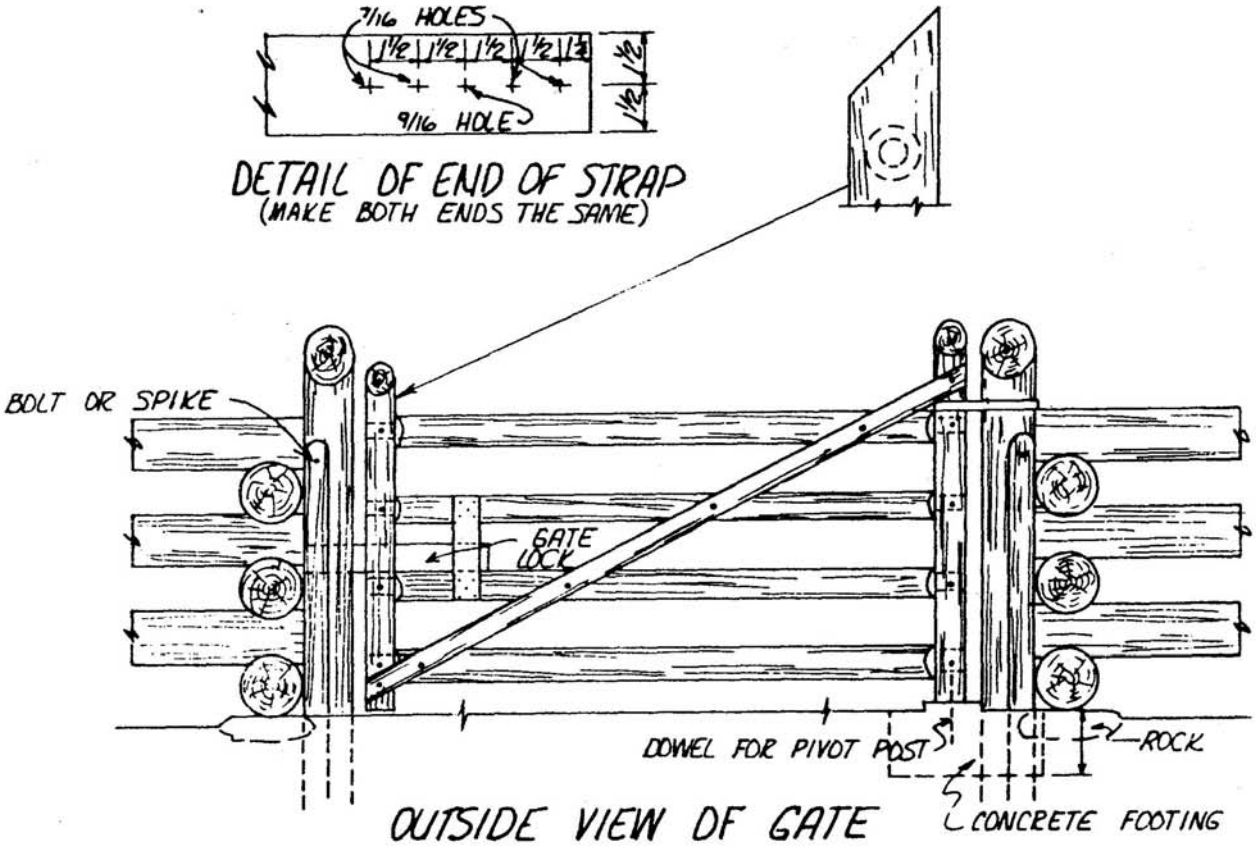

DETAIL OF END OF STRAP
(MAKE BOTH ENDS THE SAME)

OUTSIDE VIEW OF GATE

XVI. (cont.)

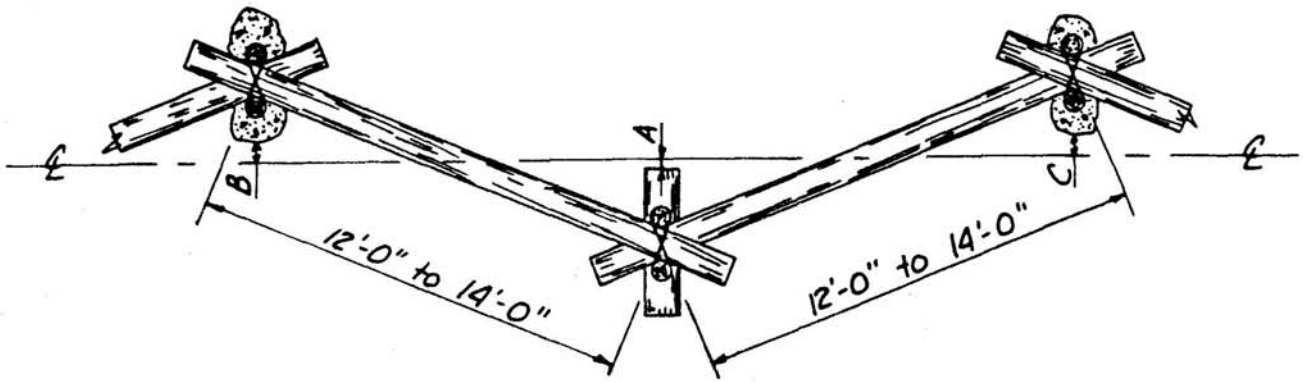

PLAN VIEW

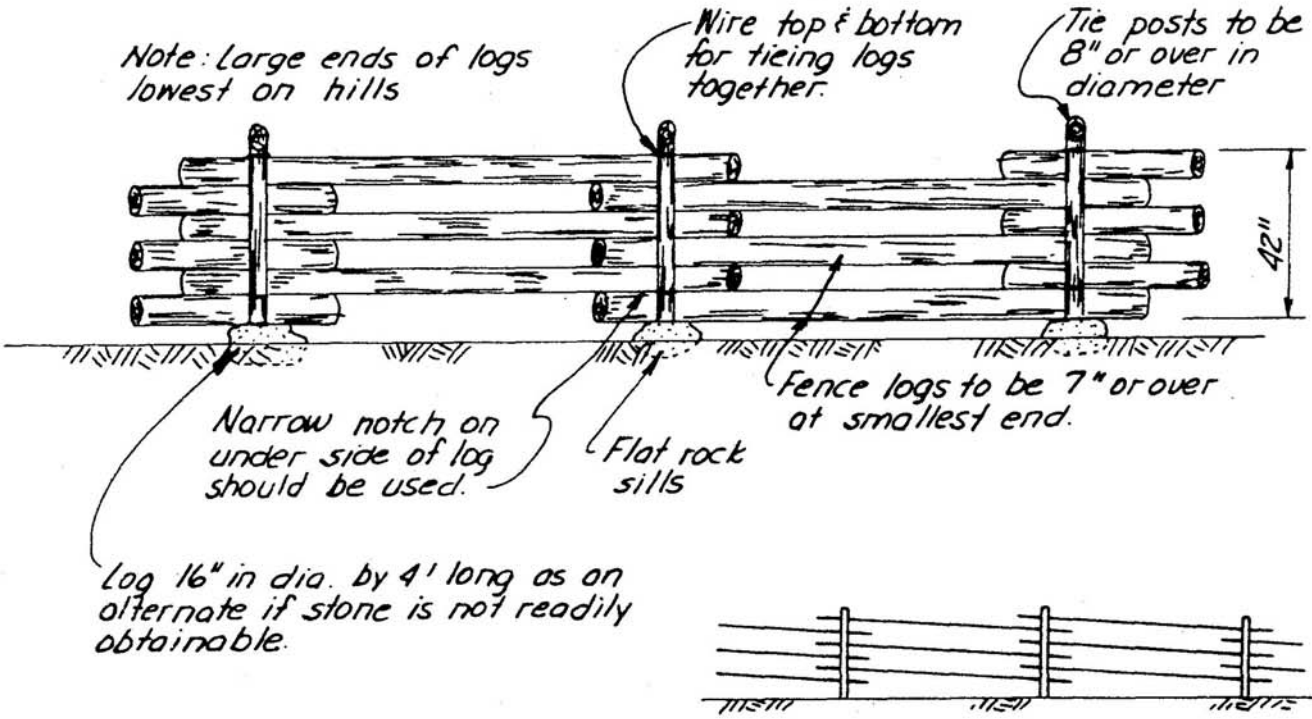

Alternate method of placing rails. Other details are unchanged.

Note: Tie post may be eliminated where heavy logs are used and logs will remain in place without tie posts; otherwise, ties posts are necessary.

XVII Let-Down Fences

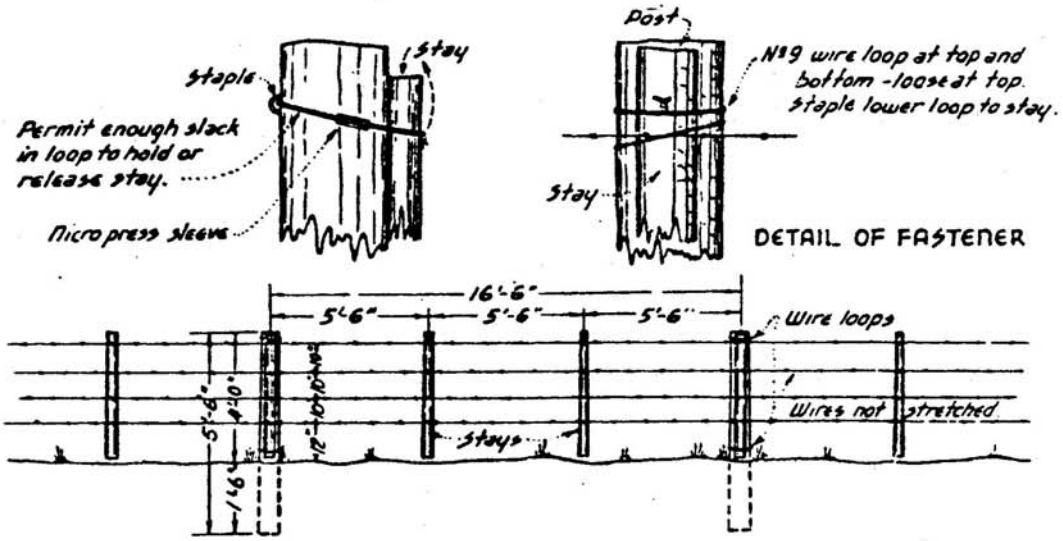

STAY LET-DOWN FENCE

NOTE: wire should be between post and stay, so when laid down, the wires are on top of stay. Prevents wire pulling loose when picking up fence.

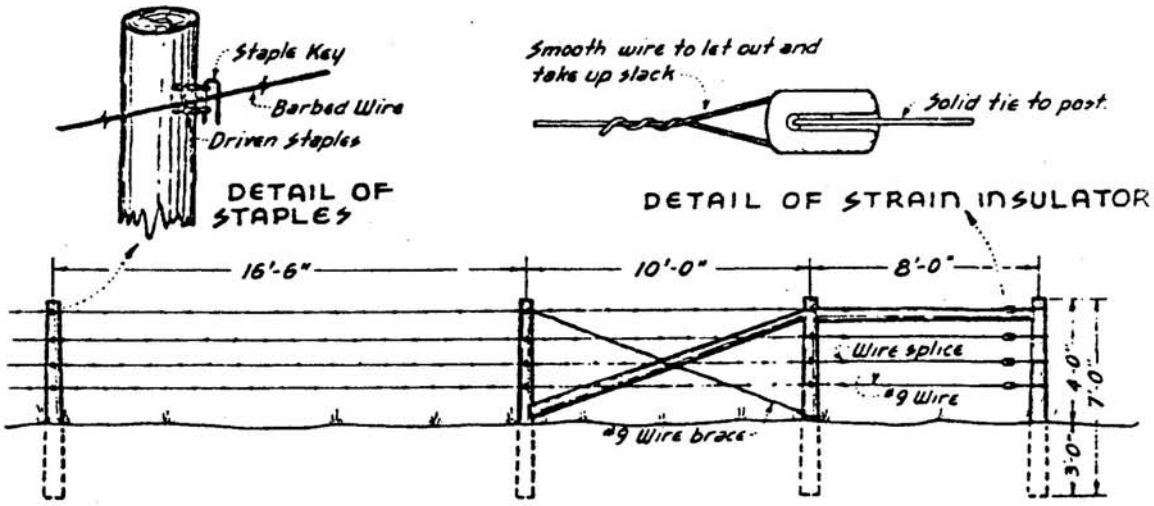

STAPLE LET-DOWN FENCE

NOTE

Steel posts may be used.

XVII (cont.)

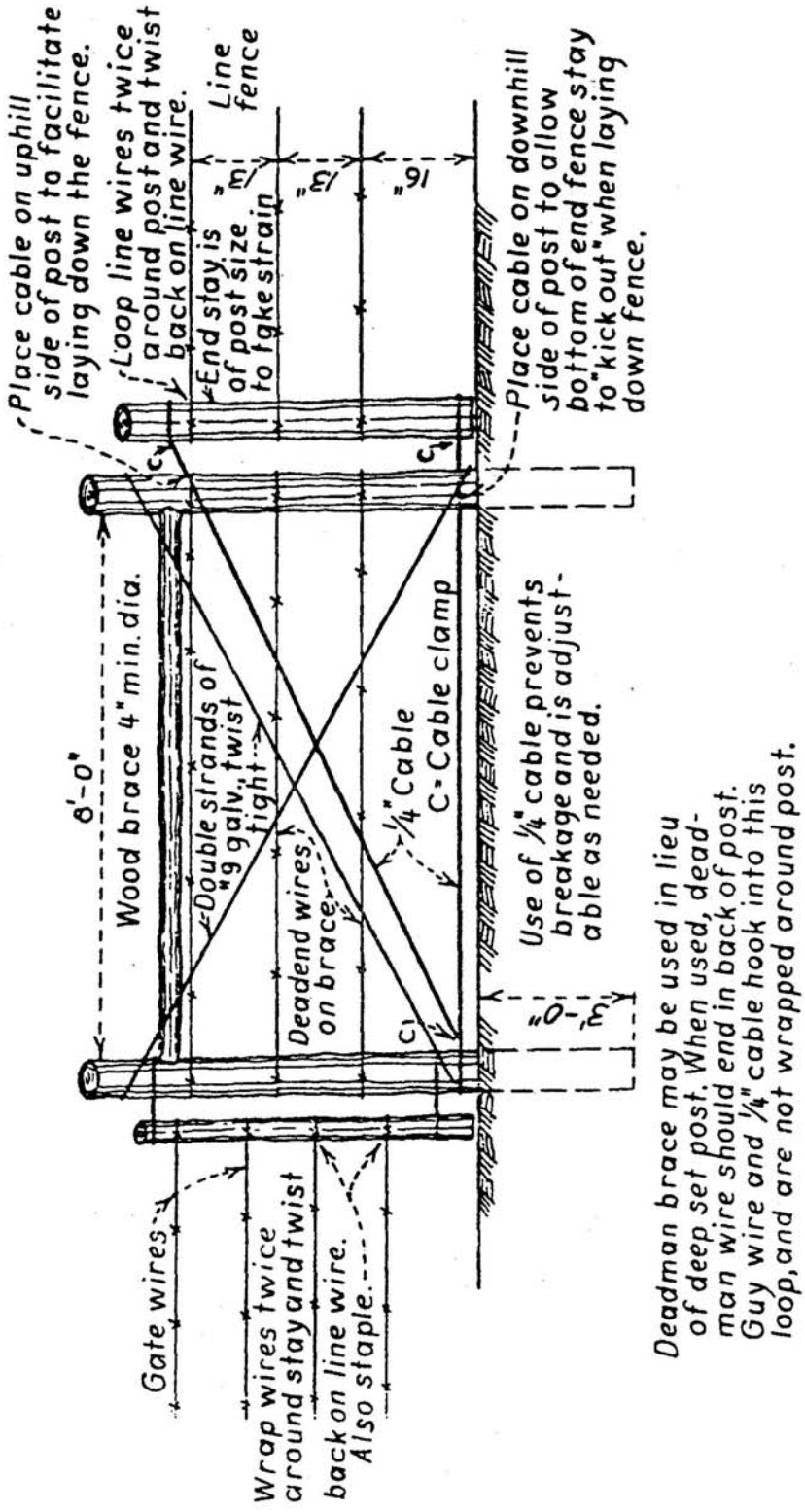
Place cable on uphill side of post to facilitate laying down the fence.
Loop line wires twice around post and twist back on line wire.
End stay is of post size to take strain
Line fence
16"
13"
13"
Place cable on downhill side of post to allow bottom of end fence stay to "kick out" when laying down fence.
8'-0"
Wood brace 4" min. dia.
Double strands of #9 galv. twist tight
Deadend wires on brace
1/4" Cable
C = Cable clamp
Use of 1/4" cable prevents breakage and is adjustable as needed.
0-13"
Gate wires
Wrap wires twice around stay and twist back on line wire. Also staple.
Deadman brace may be used in lieu of deep set post. When used, deadman wire should end in back of post. Guy wire and 1/4" cable hook into this loop, and are not wrapped around post.

XVII (cont.)

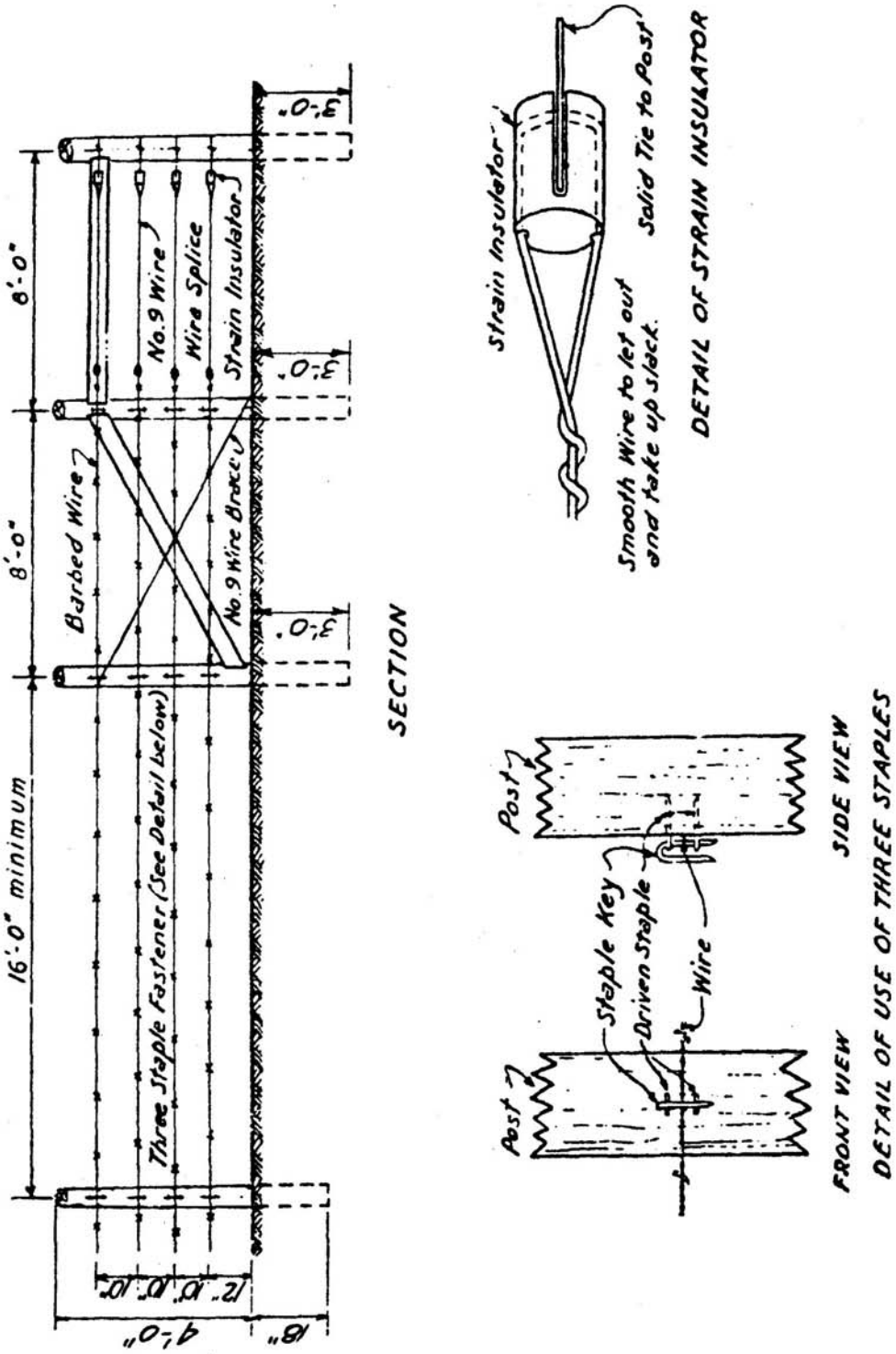
8'-0"
8'-0"
16'-0" minimum
Barbed Wire
No.9 Wire
Wire Splice
Strain Insulator
No.9 Wire Brace
Three Staple Fastener (See Detail below)
3'-0"
3'-0"
3'-0"
12" 10" 10" 10"
4'-0"
18"
SECTION
Strain Insulator
Solid Tie to Post
Smooth Wire to let out and take up slack.
DETAIL OF STRAIN INSULATOR
Post
Staple Key
Driven Staple
Wire
Post
FRONT VIEW
SIDE VIEW
DETAIL OF USE OF THREE STAPLES

XVII. (cont.)

Note: Nico-Press sleeves may also be used to advantage in splicing loops or fence.

Clamp in ½" chuck of electric drill. Apply about 15 lb. pressure while twisting wire. Device will free itself.

One man can make about 300 loops per day using this system. They will be uniform in size and shape.

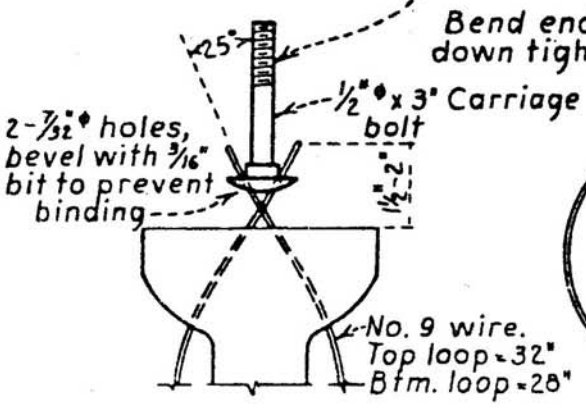

FIGURE 2
METHOD USED TO TWIST WIRE

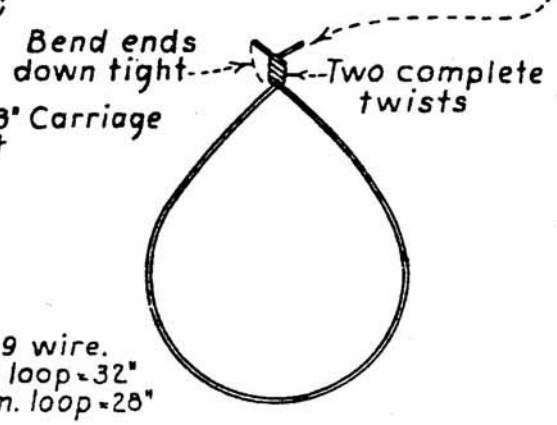

FIGURE 3
METHOD USED TO FINISH WIRE

1. Cut number of wires needed, length depending on size of loop wanted. Usually 32"
2. Cut a 1" galv. pipe the same length as wire wanted, cap one end.
3. Clamp pipe in vise.
4. Place wire in pipe all the way to pipe cap. Cut wire at pipe entrance. One man can do job.

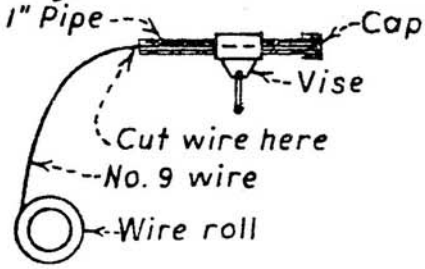

FIGURE 1
METHOD OF CUTTING WIRE TO UNIFORM LENGTH

XVII (cont.)

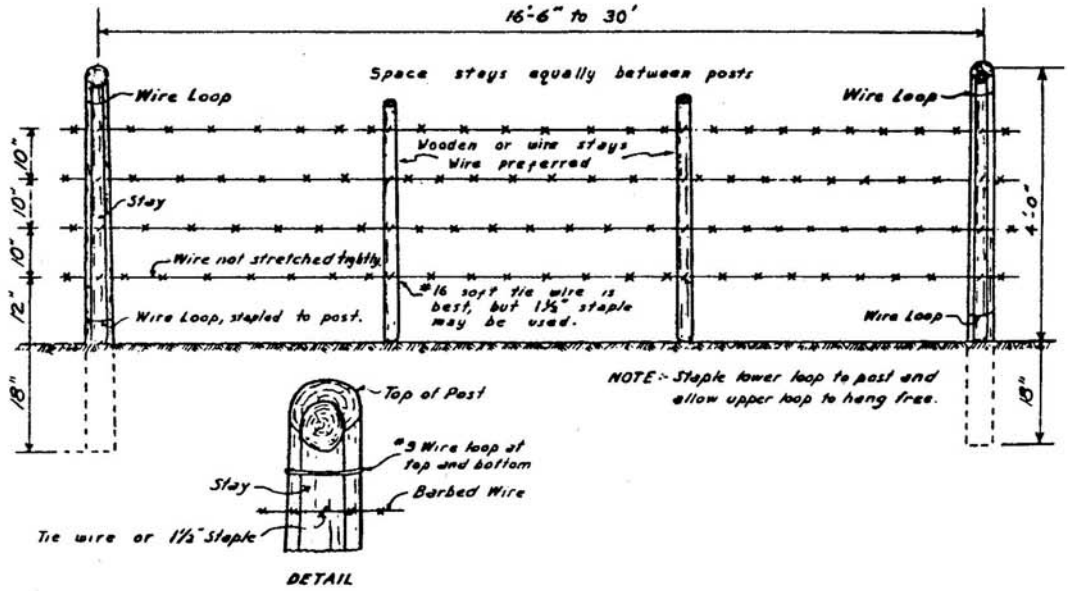
16'-6" to 30'
Space stays equally between posts
Wire Loop
Wire Loop
Wooden or wire stays
Wire preferred
Stay
Wire not stretched tightly
#16 soft tie wire is best, but 1½" staple may be used.
Wire Loop, stapled to post.
Wire Loop
NOTE:- Staple lower loop to post and allow upper loop to hang free.
10"
10"
10"
12"
18"
4'-0"
18"
Top of Post
#9 Wire loop at top and bottom
Stay
Barbed Wire
Tie wire or 1½" Staple
DETAIL

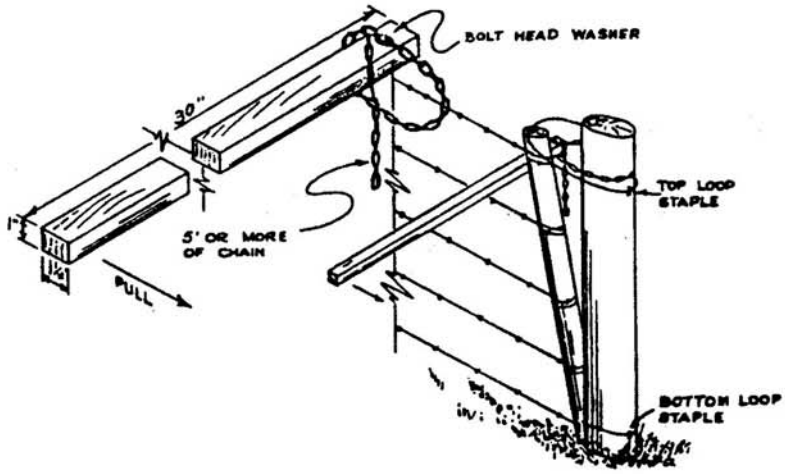
BOLT HEAD WASHER
30"
1"
5' OR MORE OF CHAIN
PULL
TOP LOOP STAPLE
BOTTOM LOOP STAPLE

XVIII. Recreation Gates – Stiles – Ladders – Barriers

Occasionally, stiles and special gates are necessary for park administration or maintenance. Here are a few which might fit a variety of requirements.

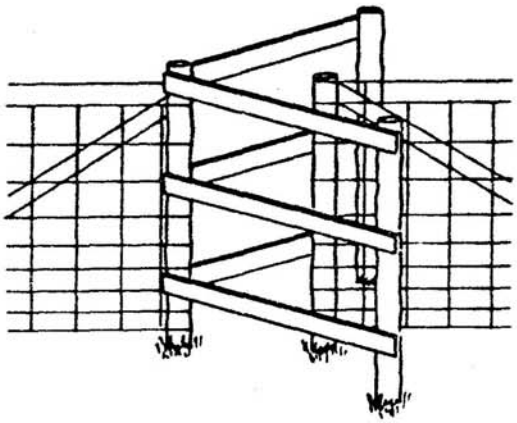

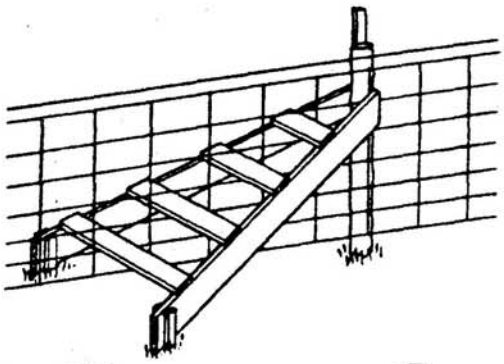

RAIL STILE

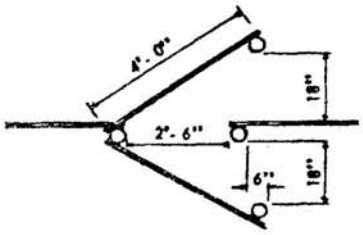

WALK-THROUGH STILE

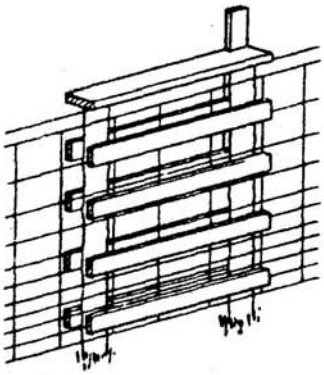

IN LINE STILE

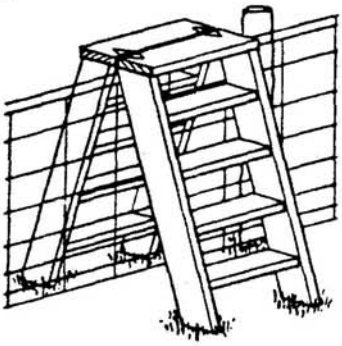

PORTABLE STILE

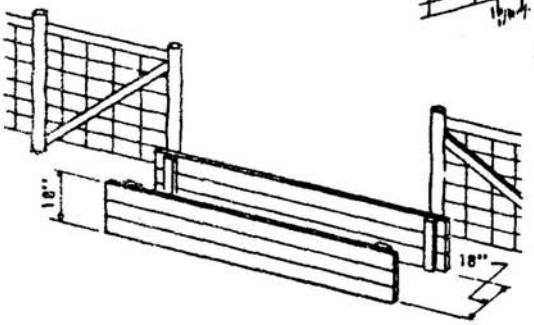

GATE FOR CATTLE ONLY

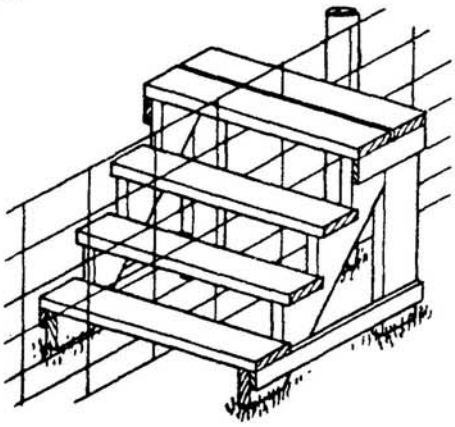

STEP-OVER STILE

XVIII. (Cont.)

Somewhat sturdier than the pole gate shown in DESIGN sheet P-2411 this one features both a rod hanger and a knee brace. Especially recommended for longer spans.

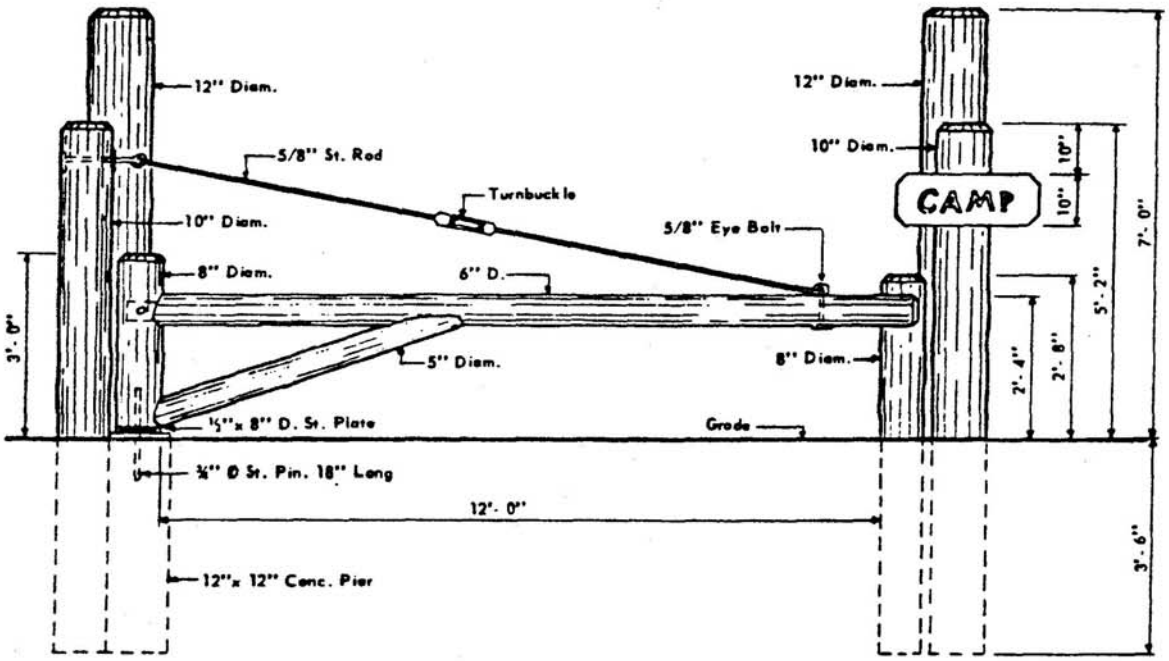

ELEVATION

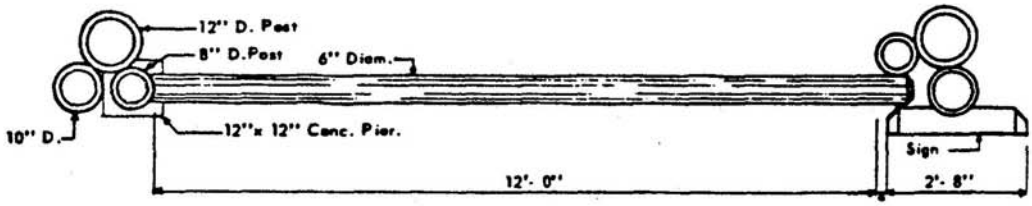

PLAN

XVIII. (Cont.)

A park entrance of pleasing proportions submitted by the Texas State Parks Board. While appropriate for most non-urban parks it would be most proper for plains type areas where a low silhouette is to be desired. The cedar rails give a rustic character to otherwise semi-formal masonry.

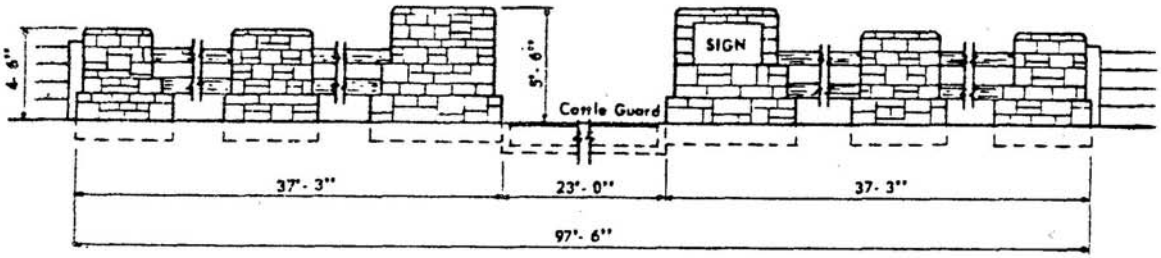

ELEVATION

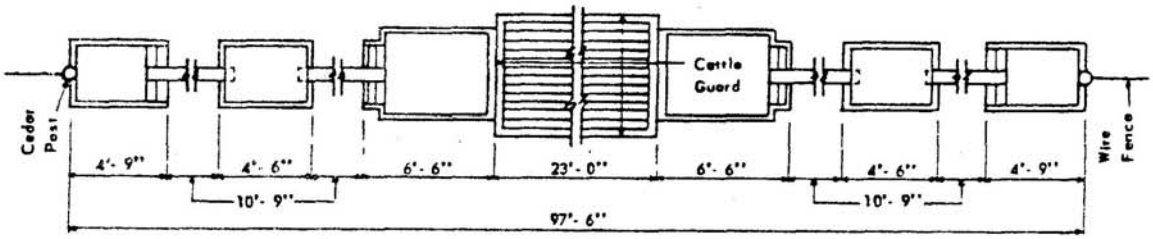

PLAN

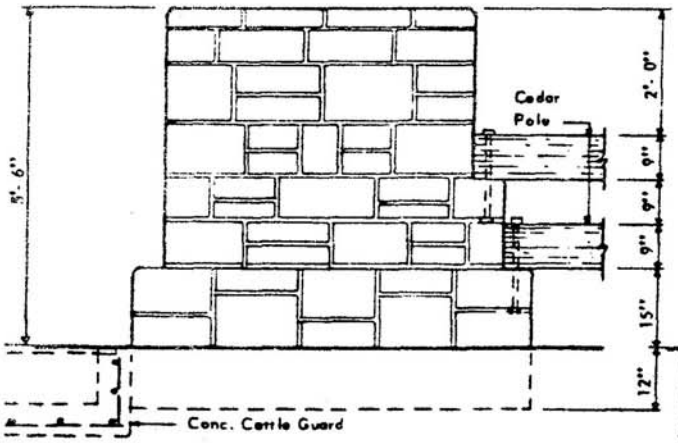

ELEVATION

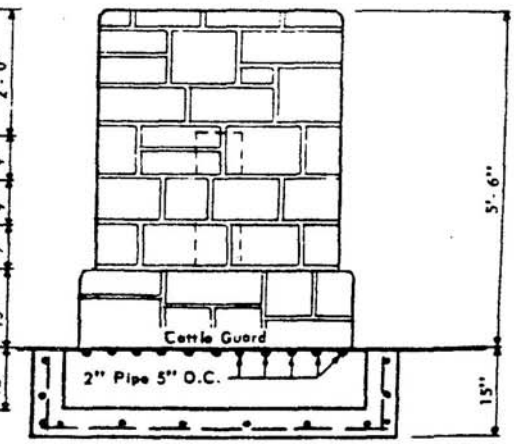

SECTION

XVIII. (Cont.)

A variation of the pole gate with post clusters. Preservative treatment is strongly recommended in this type of construction.

The turn post rides on a steel pin in a concrete footing; top is guided by strap anchored to two permanent posts.

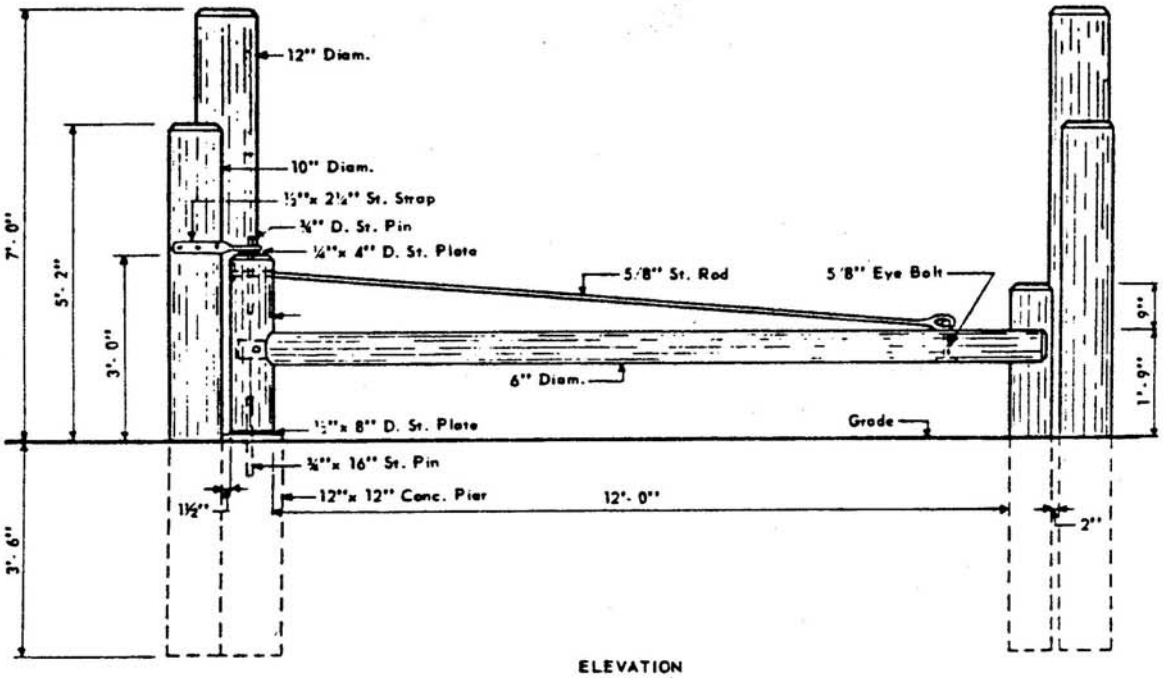

ELEVATION

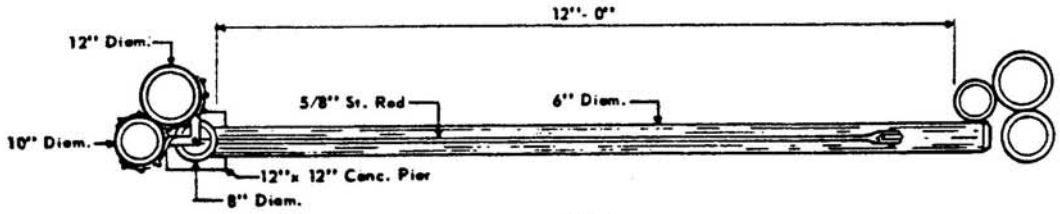

PLAN

XVIII. (Cont.)

A rustic entrance gateway, constructed of pealed, treated logs, and joined with hardwood dowels. The turnposts swing on steel pins imbedded in either side. Unobtrusive in its setting, yet effective, this gate should serve for many years with a minimum of care.

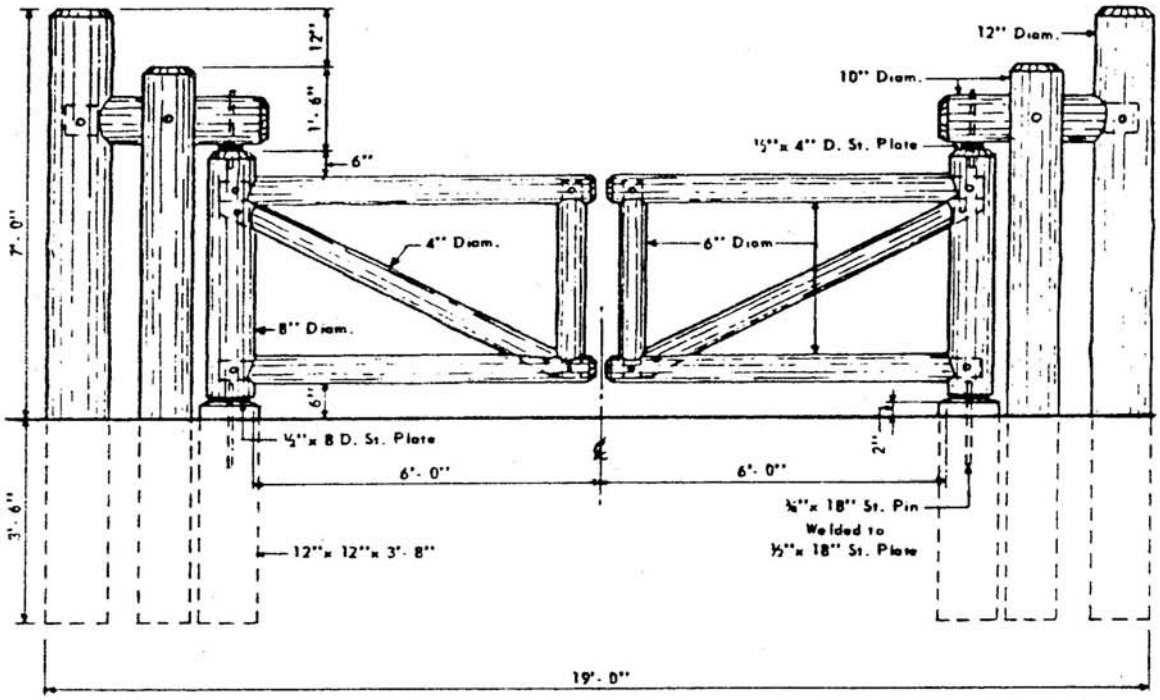

ELEVATION

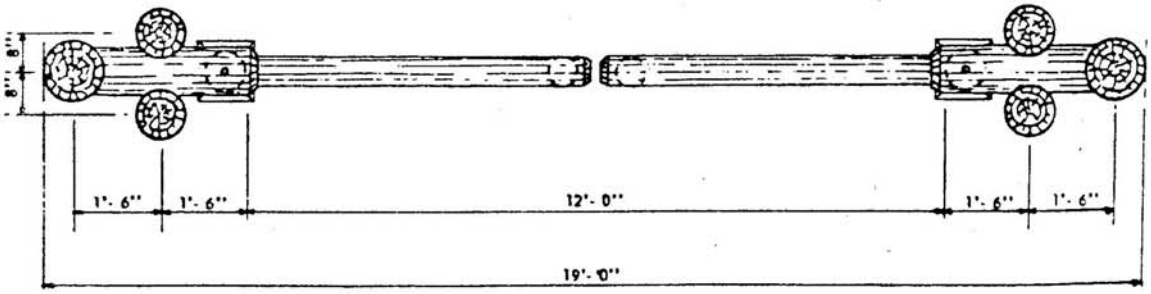

PLAN

XVIII. (Cont.)

Here is an "old stand-by" type of gate—neat in appearance and thoroughly practical—but with a new twist. Instead of the rail post pivoting on a base pin, this one swings on two in-line brackets hung on each 12x12" columns.

Should move freely in all weather.

Locking may be by hasp or chain where the rails meet.

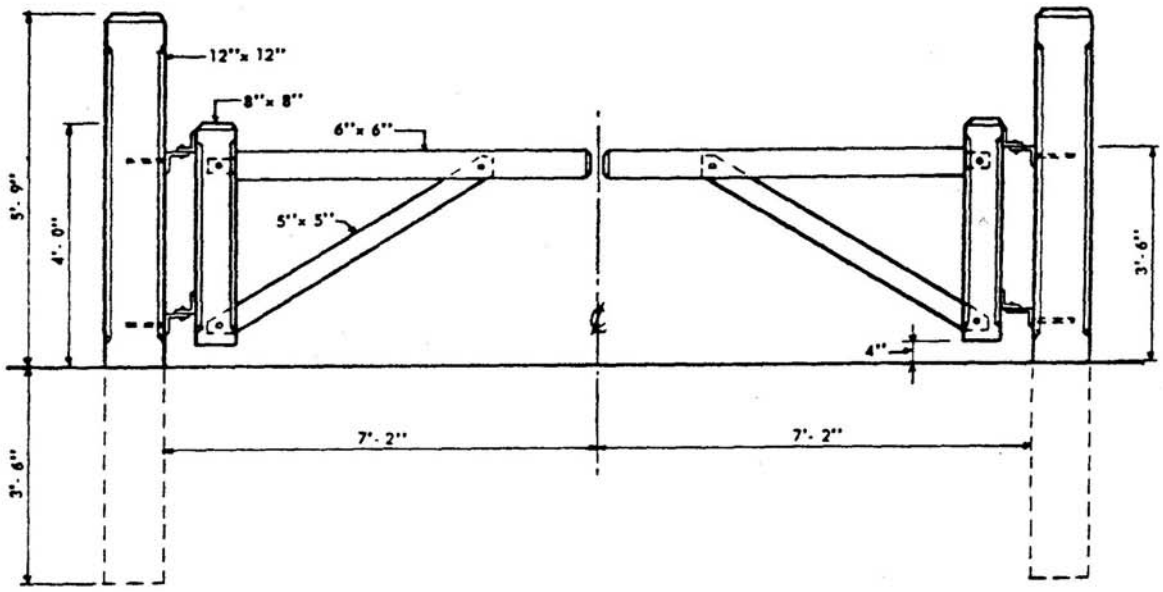

ELEVATION

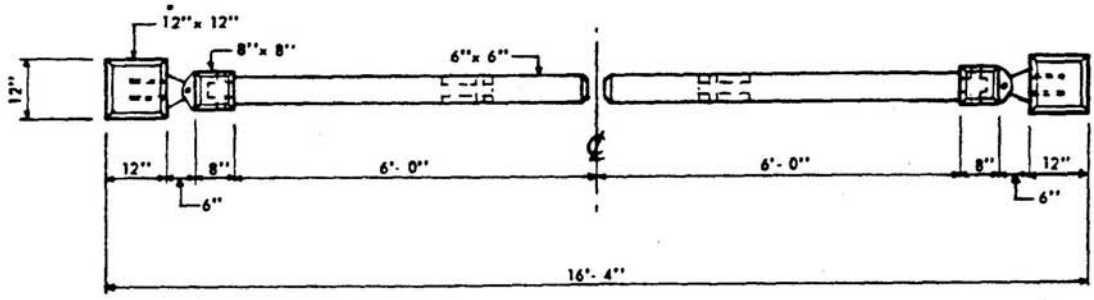

PLAN

XVIII. (cont.)

This gateway can be build from finished lumber or from pealed logs. When finished lumber is used, a 5/8" guy rod supports the gate. A chain supports the gate when pealed logs are used.

Relatively inexpensive yet versatile, simple and practicle this barrier is nice enough for most rustic settings.

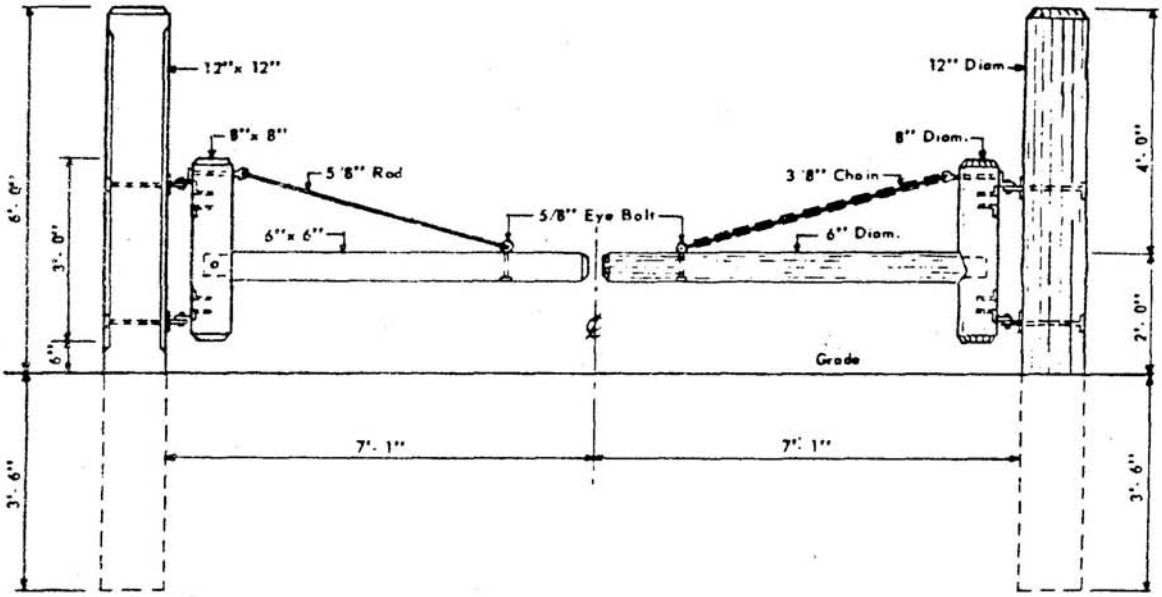

HALF ELEVATION
SQUARE TIMBERS

HALF ELEVATION
ROUND TIMBERS

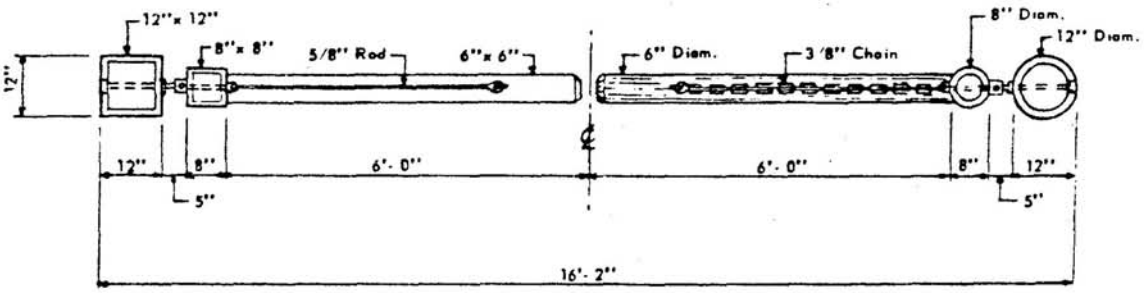

HALF PLAN
SQUARE TIMBERS

HALF PLAN
ROUND TIMBERS

XVIII. (cont.)

A service road barrier so simple and unobtrusive it could fit into almost any setting. Two barrier posts (or more) on either side discourage motorists from driving around the ends when the road is closed. Barriers are set to permit pedestrian access. A similar post should be located so that the barrier can be locked open when necessary. A piece of reflectorized metal should be hung from the pipe arm warning drivers that the road is closed.

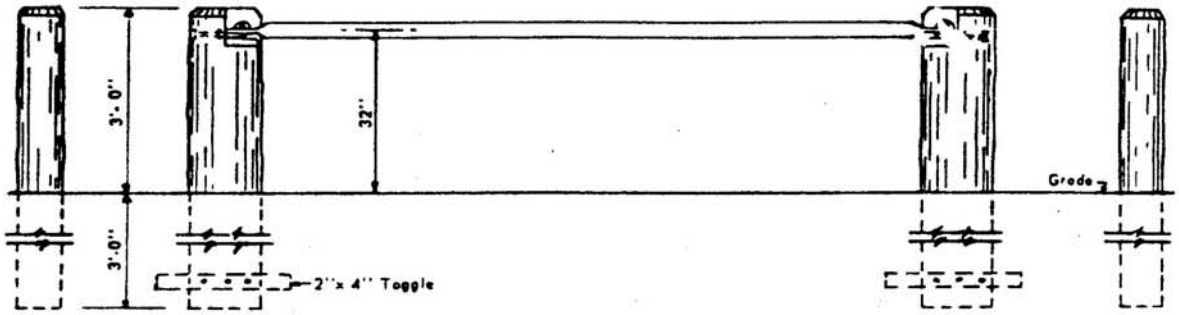

ELEVATION

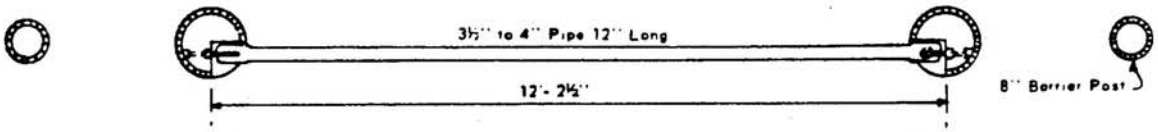

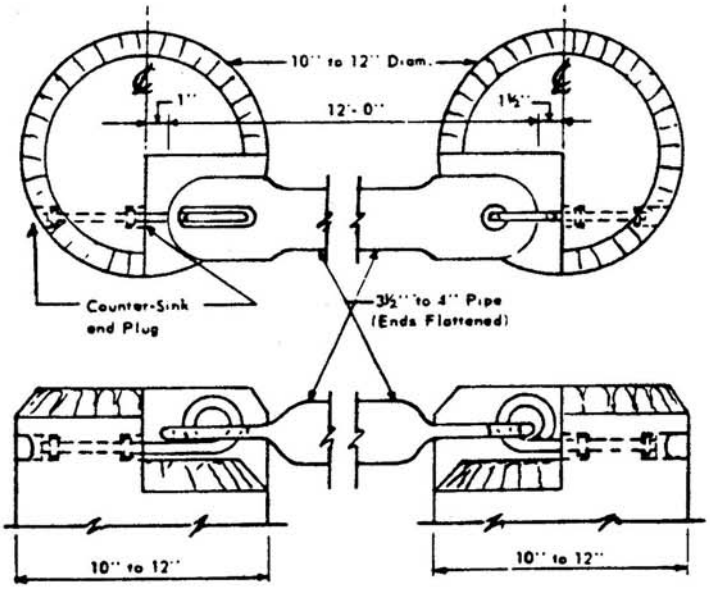

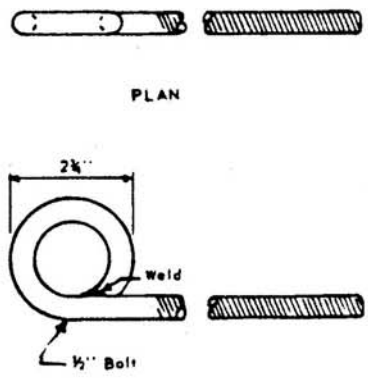

DETAILS

XVIII. (Cont.)

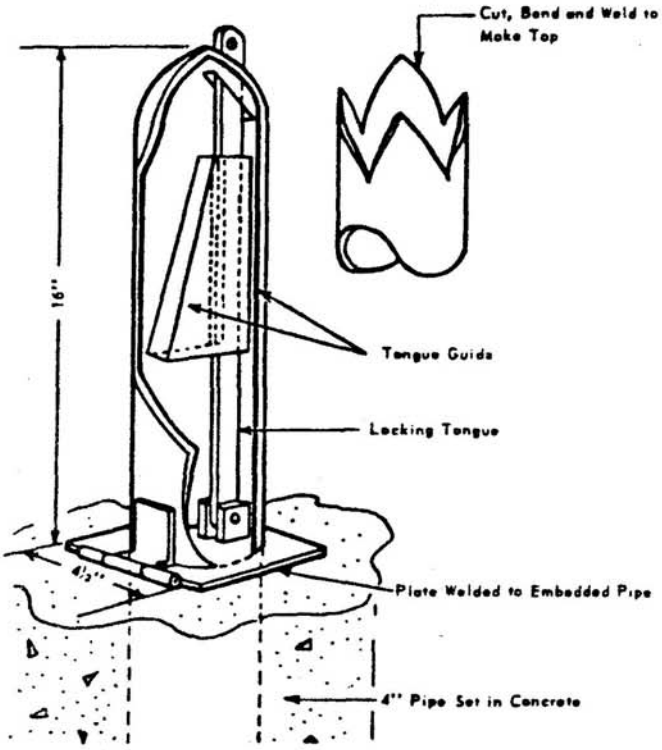

This road barrier is designed to prevent vehicular flow when necessary and yet never interfere with pedestrian travel.

It used 4" steel pipe with a section buried underground and hinged section attached on top.

To prevent vehicles from entering a road, the barrier is stood upright and, by use of a hinged locking tongue inside the pipe, is locked in that position. To allow vehicular flow, the lock is removed and the pipe swiveled to its down position, where it will be easy for any vehicle to clear it simulating, in this position, the familiar "speed bumps."

A metal plate welded to the locking tongue inside the pipe serves as a guide and prevents the tongue from improper positioning, insuring that the device will remain a locking device.

To make the pointed end of the top, cut 4 spade-shaped sections out of the pipe and bend the remaining points together, welding them shut. After assembly, a slit is torch-cut into the top to allow exit of the locking tongue.

XVIII. (Cont.)

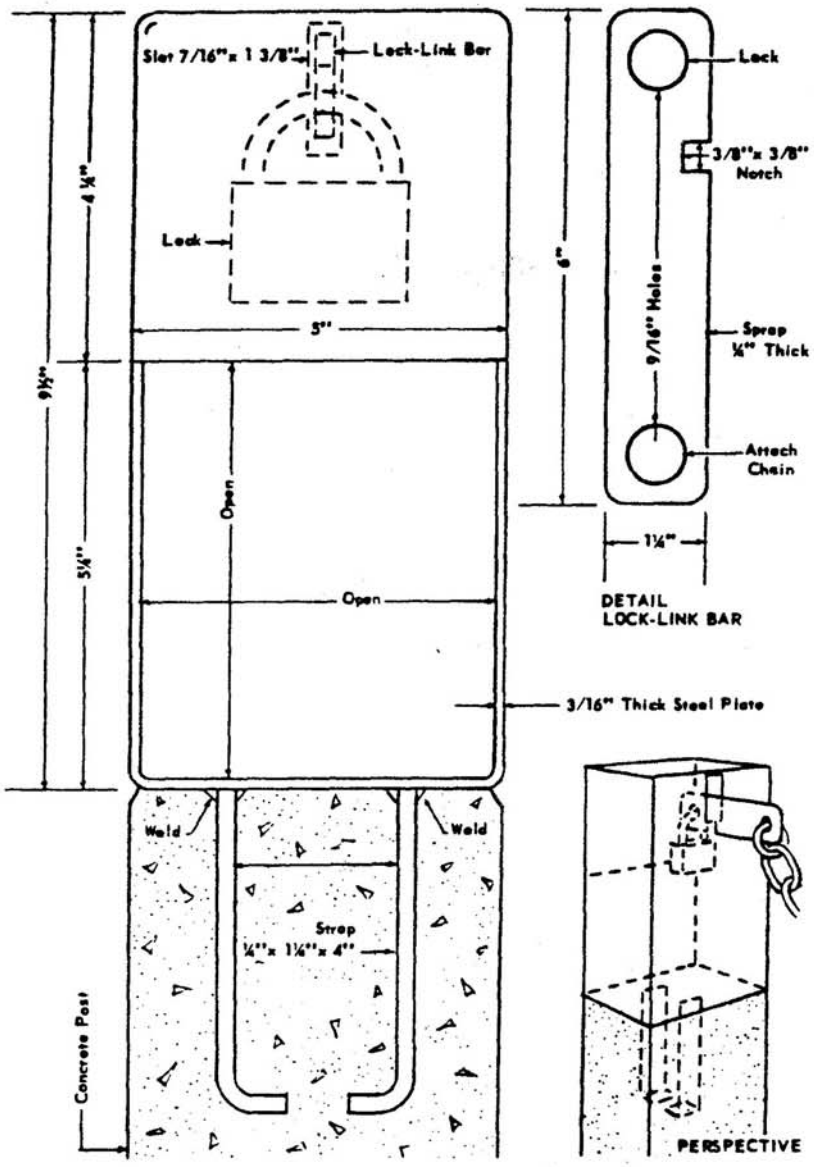

This plan gives the pertinent details for a simple, but effective, road closing barrier. It was provided DESIGN by Park Engineer Jim Bowman of Cape Cod National Seashore.

XVIII. (Cont.)

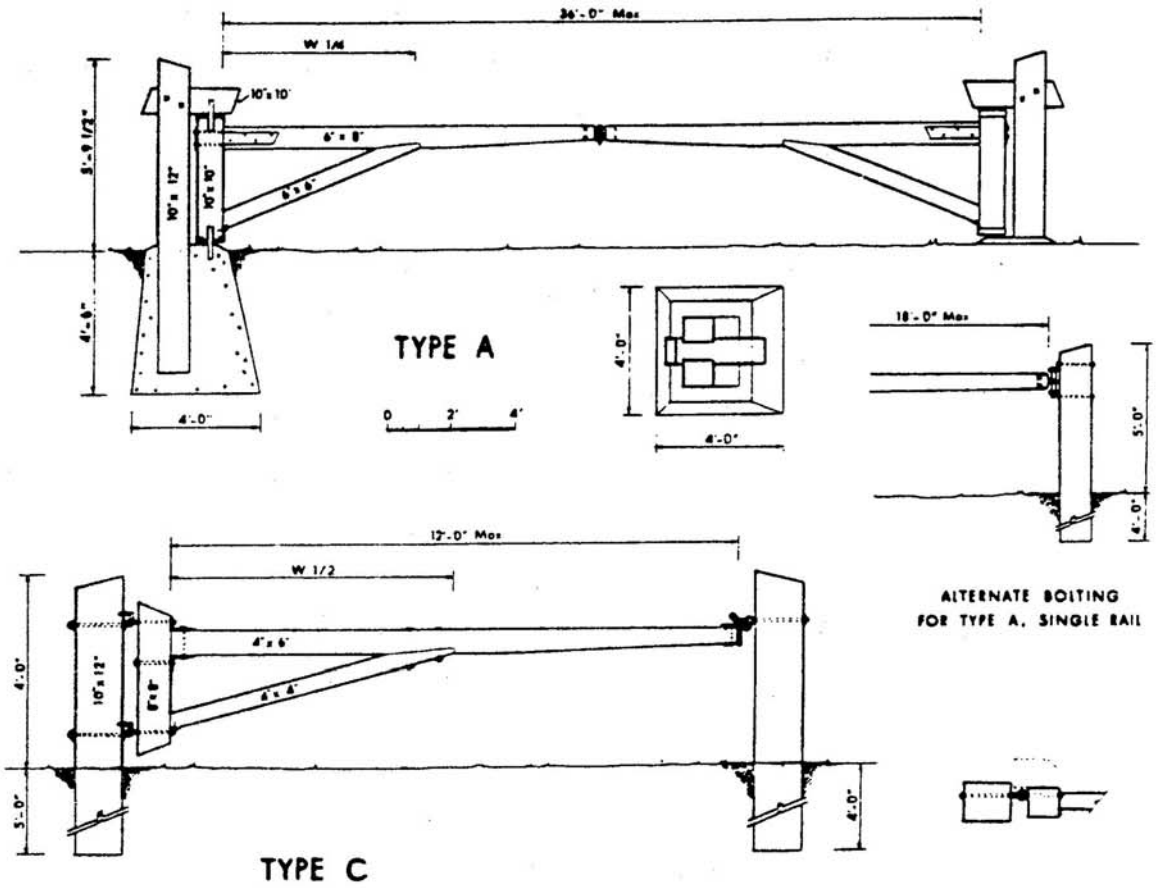

Two types of entrance gates of generally good design. TYPE A is of a heavier and more permanent design in which the gate proper pivots on its own axis with the weight directly upon the concrete foundation. In TYPE C, the weight of the gate rests entirely upon the upright post. Either type of mounting may be employed for either the single, or the double swing gate. Pipe may be used if desired, but wooden gates should be made of pressure treated materials.

XIX Electric Wire Fences

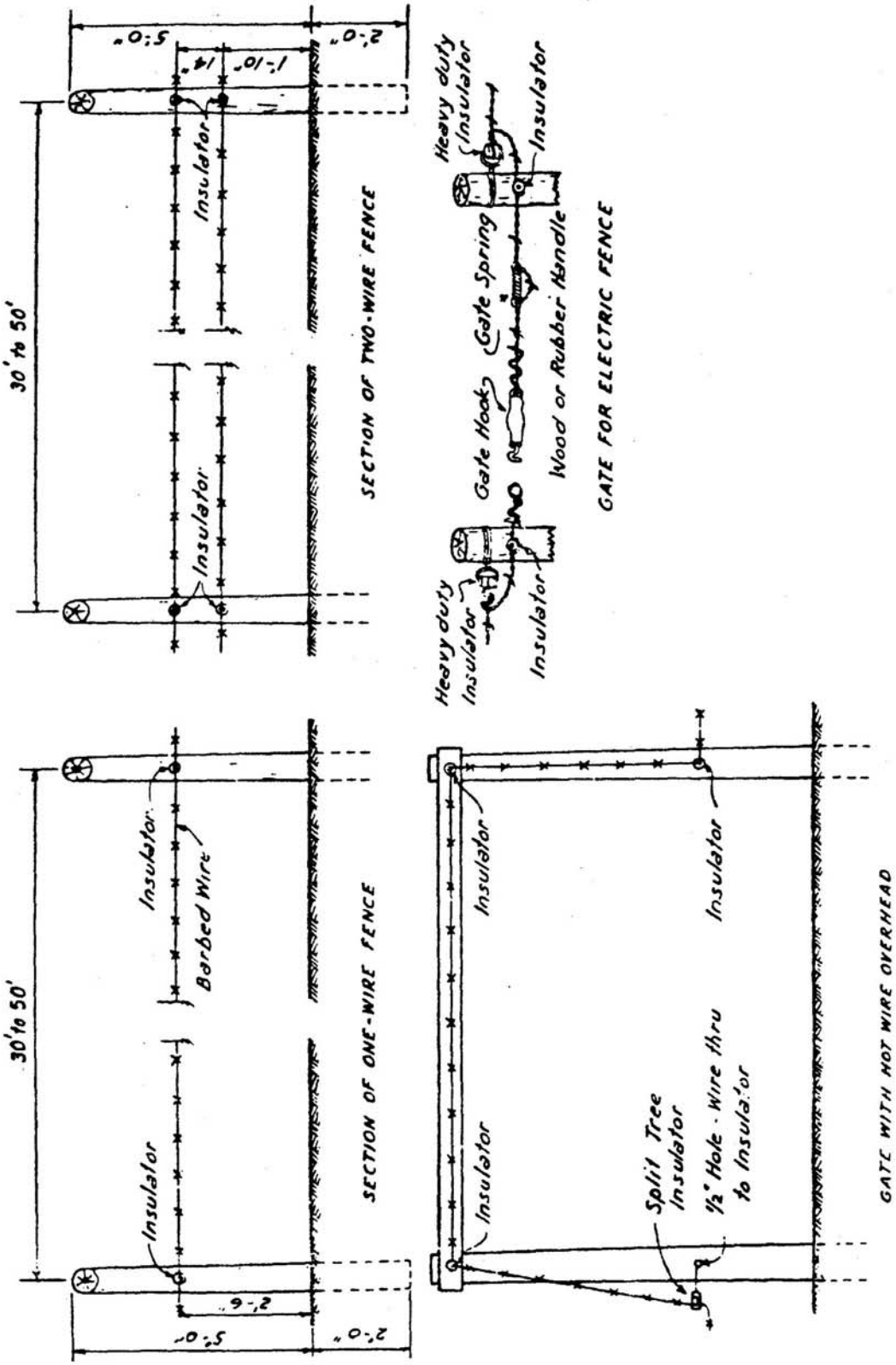

XIX Electric Wire Fences

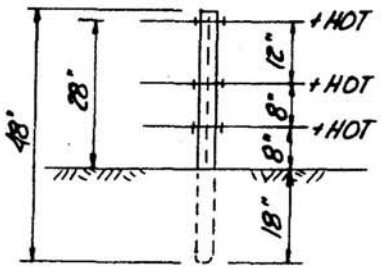

"HOT" 3 WIRE FENCE

"HOT" Wire Fence is most common and works well with soil that is sufficiently moist to provide good conductivity back to ground rod and fence charger when animal completes circuit between wire and ground.

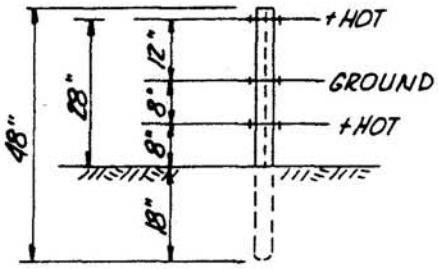

"HOT" and "GROUND" 3 WIRE COMBINATION FENCE

"HOT" and "GROUND" Combination Fence is used to assure good electrical shocking effect in dry soil conditions when animal completes circuit between ground wire and hot wire. This system is recommended in arid climates where annual rainfall is 20 inches or less. The "HOT" and "GROUND" style fence may also be preferred for sheep or goats.

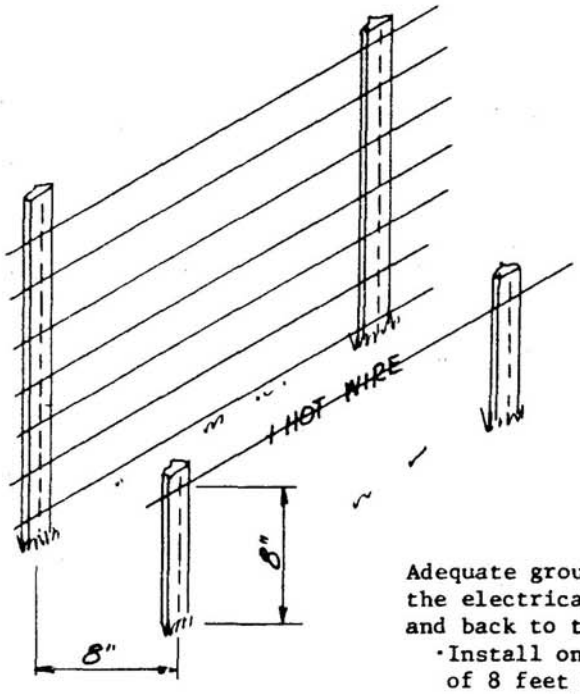

Adequate grounding cannot be overstated. Unit must complete the electrical circuit from the hot wire through the animal and back to the ground rod through the soil.

- Install one to four rods of 3/4" galvanized pipe a minimum of 8 feet into moist soil or an area of water runoff. In areas of high soil moisture (22" rainfall or more), one rod is adequate. In dry areas, use up to 4 rods.
  Ground to old well casing, if available.
  Do not ground near utility pole ground rods.

XIX Electric Wire Fences

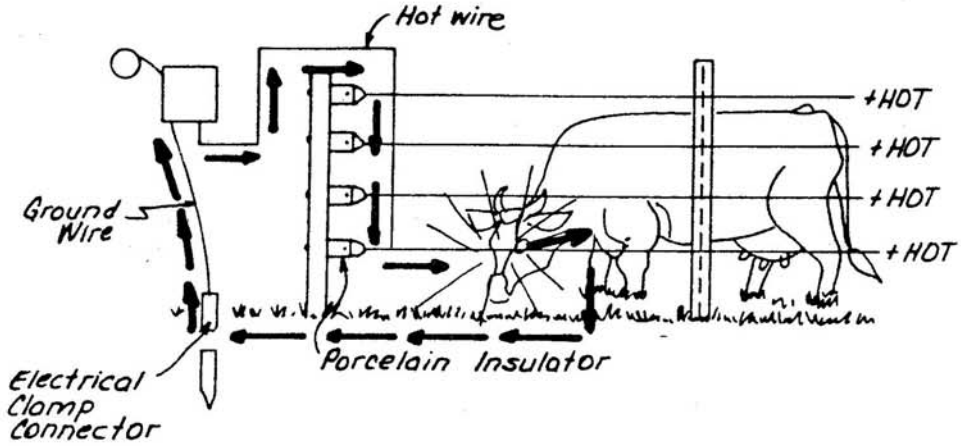

8 feet deep--3/4" galvanized pipe. Install in area of good moisture runoff. Fasten wire securely to pipe with clamp connector. Drill several holes in ground pipe so it can collect moisture for better conductivity.

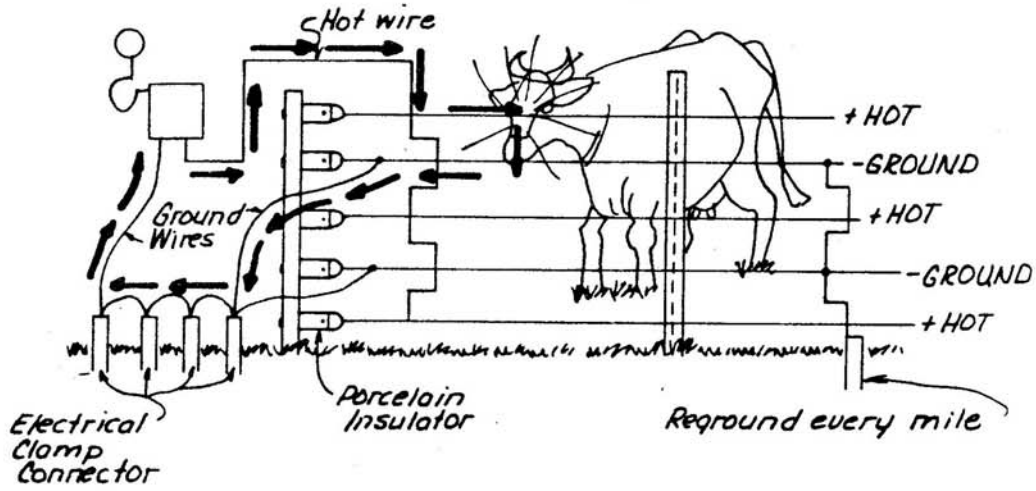

Ground rods 8 feet deep--3/4" galvanized pipe set 6 feet or more apart--in area of water runoff.

XX Curve or Contour Fences

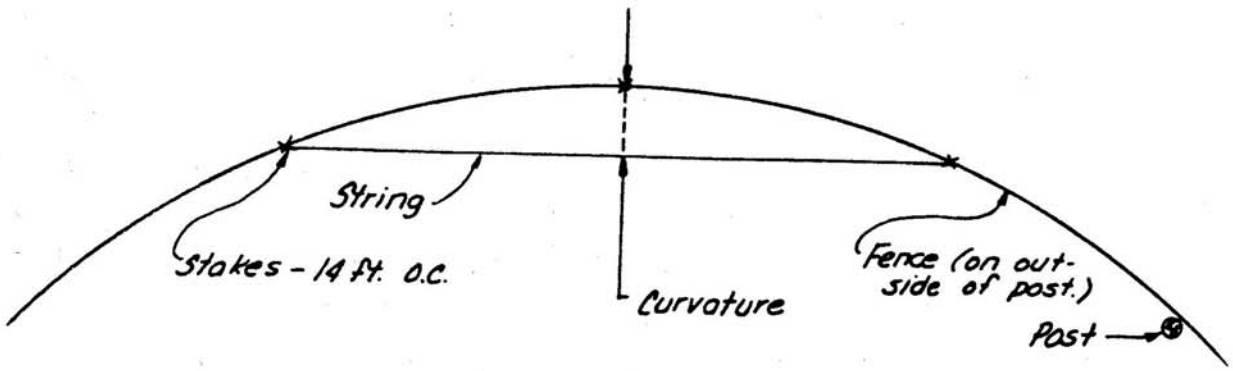

Curve or contour fence shall have maximum post spacing as follows:

Fence Curvature		Post Spacing	
in.	cm.	ft.	cm.
4 or less	10	14	427
5-6	13-15	12	366
7-8	18-20	10	305
9-14	23-36	8	244
15-20	38-51	7	213

1. Curvature shall be measured in inches from a stake along the proposed fence line, to a string connecting two other stakes along the fence line each 14 feet away from the first post.

2. Post spacing shall be measured horizontally.

3. Posts shall lean outward from the curve approximately 2 inches at the top, and fencing shall be applied to the side of the posts outside the curve and stretched to straighten the posts approximately 1 inch.