Soil Survey Investigations Report No. 1

SOIL SURVEY LABORATORY METHODS AND PROCEDURES FOR COLLECTING SOIL SAMPLES

Soil Conservation Service
Washington, D.C.

U.S. Department of Agriculture
Revised April 1972

CONTENTS

	Page
Introduction	1
Sample collection and preparation	7
Conventions	9
Particle-size analyses	10
Fabric-related analyses	14
Ion-exchange analyses	22
Chemical analyses	26
Mineralogy	51
Miscellaneous	57
Literature cited	62

Trade names are used in this publication solely for the purpose of providing specific information. Mention of a trade name does not constitute a guarantee of the product by the U.S. Department of Agriculture nor does it imply an endorsement by the Department over other products not mentioned.

PREFACE

This publication is the first of a new U.S. Department of Agriculture series—Soil Survey Investigation Reports. This series was established to make available technical information from cooperative laboratory and field investigations of soils of the United States, Puerto Rico, and the Virgin Islands. Many volumes will include only soil descriptions and physical, chemical, and mineralogical data from the soil survey laboratories. Others will be reports of completed studies of soil genesis.

The laboratory data in succeeding volumes in this series have been collected for a variety of purposes for about two decades. They have been distributed in unpublished form to those immediately concerned with specific problems, Some have appeared in technical journals, regional bulletins, USDA technical bulletins, and in published soil surveys. But because most of them were not published, they have been unavailable to many. We intend to publish in this series all data from the soil survey laboratories that form reasonably complete characterizations of soils. Fragmentary data collected as reference points for specific soil surveys will not be included.

There were several reasons for sampling these soils. Some were sampled to study soil genesis, some to facilitate classification, and some to obtain data to permit more useful interpretations. The soils sampled for genesis or classification studies do not always fit neatly into our present concepts of soil series. Partly because of these studies, our concepts of some soil series have changed. As a consequence, the name assigned a soil series at the time of sampling is not always the name that would be assigned today. In these publications the soil series names are being changed to follow the current series definitions.

Ways of describing soils were changing while these data were being assembled. Soil descriptions have become explicit on more and more features. The systems for designating horizons and for classifying soils have been changed. The soil descriptions being published were written at the time the samples were collected. The soil scientists who wrote them had no idea that they would be published; they prepared them as working documents to meet a specific need of a soil survey. Field textual estimates have been retained, even though sometimes at variance with the laboratory data, because the field estimates themselves are important data.

While these data were being assembled, there were many changes in laboratory methods. Consequently, laboratory data for different soils cannot be directly compared without allowance for the methods used to obtain them. This publication describes methods that have been used in the soil survey laboratories and procedures for sampling soils. Not all the methods described are in current use because methods are changed as our knowledge changes.

"Soil Survey Laboratory Methods and Procedures for Collecting Soil Samples" - Soil Survey Investigations Report No. 1

Errata

Code pages are reversed.

Method 4F2. Should read "Plastic limit"

Method 8A2. Should read "Bureau of Soils cup, resistance"

Page 21. Method 4F. Plasticity index Should read "The plasticity index is the difference between the plastic limit and the liquid limit."

Method 4F2. Should read "Plastic limit"

Page 27. Method 6A2a. Organic carbon, dry combustion Calculations: Should read "Report on ovendry basis as in 6A1b."

Page 29. Method 6A2b. Organic carbon, dry combustion Calculations: Should read "Report on ovendry basis as in 6A1b."

Page 58. Method 8A2. Should read "Bureau of Soils cup, resistance" Calculations: Should read "Convert to resistance at 60° F by referring to table 2. Use this value and table 9, p. 349, Soil Survey Manual, to estimate percentage of soluble salt."

Page 60. Method 8E1. Soil resistivity, saturated paste Should read "Multiply resistance at 60° F (method 8A2) by the cell constant (approximately 4 for Bureau of Soils cup) to convert to resistivity, ohms per centimeter."

Addendum

Page 24. NH_4Cl 5A7

Procedure

Proceed as in 5A6 except substitute 1N NH_4Cl for pH 7 NH_4OAc.

Direct distillation 5A7a

Determine ammonia by Kjeldahl distillation as described in 5A1a.

INTRODUCTION

The methods and procedures described in this publication are those in current use or that have been used in the soil survey laboratories of the Soil Conservation Service. Most of the methods are described in enough detail that they can be reproduced in many laboratories without reference to other sources. For some methods, however, an investigator may need or wish to read more about the theory or technique of a method. Therefore, references to the literature are included.

In subsequent volumes of this series, headings for columns of laboratory data include a symbol that refers to a method described in this volume, which is identified on a code sheet to be included in each volume. This code sheet (fig. 1) may give enough information to someon wh wants only a general idea of the method used. For some methods it is necessary to refer to several sections to learn the complete procedure. An example of how the symbols are used is a data sheet for Hayter silt loam (fig. 2), which indicates that ovendry bulk density was determined by a method having the symbol 4A1h. The code sheet sh ws that 4A1h describes the calculation of bulk density of ovendry clods coated with Saran. Anyone wishing to learn more of the details of this method and preparation of the clods must read sections 4A and 4A1 as well as the brief statement in 4A1h.

Figure 3 is the profile description of Hayter silt loam that accompanies the data sheet. It illustrates some of the volume estimates of materials of different size made in the field, which are discussed in section 3B.

Values reported on the data sheets are either primary or derived. A primary value is the result of direct calculations for a particular determination from which the derived values can be calculated. For example, carbon percentage and nitrogen percentage are primary values; the carbon-nitrogen ratio is derived by dividing carbon percentage by nitrogen percentage.

How other derived values reported for the B1 h rizon (5 to 10 inches) of Hayter silt loam were calculated is shown in the following list, which includes references (in parentheses) to the appropriate sections of this publication.

Values related to bulk density:

Primary values:

Moist bulk density (Db_m)	1.35 g per cubic centimeter (4A1e)
Dry bulk density (Db_d)	1.39 g per cubic centimeter (4A1h)
Particle density (Dp)	2.65 g per cubic centimeter (assumed)
Volume (pct.) of >75-mm material based on unit volume of whole soil (x)	25 percent or 0.25 (3B2)
Weight (pct.) of 2-mm to 75-mm material based on unit weight of <75-mm material (y)	22+4 percent or 0.26 (3B1)
Water content at ½-bar tension ($W_{\frac{1}{2}}$)	26.8 percent (4B1c)
Water content at 15-bar tension (W_{15})	11.5 percent (4B2)
Coarse fragment conversion factor (cm)	0.64 (3B2)

Derived values:

Volume (pct.) of >2mm material of whole soil

$$>2 = 100\left[1-\left(\frac{Dp(1-y)(1-x)}{Dp(1-y)+Db_m(y)}\right)\right]$$

$$= 100\left[1-\left(\frac{2.65(0.74)(0.75)}{2.65(0.74)+1.35(0.26)}\right)\right]$$

$$= 36 \text{ percent} \qquad (3B2)$$

Weight (pct.) of >2mm material of whole soil

$$>2 = \frac{100\ Dp(x)}{Dp(x)+Db_m(1-x)}$$

$$= \frac{100\ (2.65)(0.36)}{2.65(0.36)+1.35(1-0.36)}$$

$$= 52 \text{ percent} \qquad (3B1)$$

Linear extensibility (LE)

$$LE(\text{pct.}) = 100\left[\left(\frac{1}{C_m\left(\frac{Db_m}{Db_d}\right)+(1-Cm)}\right)^{\frac{1}{3}}-1\right]$$

$$= 100\left[\left(\frac{1}{0.64\left(\frac{1.35}{1.39}\right)+(1-0.64)}\right)^{\frac{1}{3}}-1\right]$$

$$= 0.6 \qquad (4D1)$$

Water-retention difference (WRD)

$$WRD = \frac{(W_{\frac{1}{2}}-W_{15})(Db_m)Cm}{100}$$

$$= \frac{(26.8-11.5)(1.35)0.64}{100}$$

$$= 0.13 \qquad (4C1)$$

Cation-exchange capacity and base saturation:

Primary values:

Extractable calcium	1.6 meq per 100 g (6N2d)
Extractable magnesium	1.1 meq per 100 g (6O2b)
Extractable sodium	0.1 meq per 100 g (6P2a)
Extractable potassium	0.2 meq per 100 g (6Q2a)
Extractable acidity	10.8 meq per 100 g (6H2a)

6. CHEMICAL ANALYSES (cont.)
    d. Weight gain
    e. Titrimetric
    f. Warburg method
  2. Sensitive qualitative method
    a. Visual, gas bubbles
  3. H_2SO_4 treatment
    a. Weight gain
F. Gypsum
  1. Water extract
    a. Precipitation in acetone
    b. Indirect estimate
G. Aluminum
  1. KCl extraction I, 30 min.
    a. Aluminon I
    b. Aluminon II
    c. Aluminon III
    d. Fluoride titration
    e. Atomic absorption
  2. KCl extraction II, overnight
    a. Aluminon I
  3. NH_4OAc extraction
    a. Aluminon III
  4. NaOAc extraction
    a. Aluminon III
  5. Sodium pyrophosphate extraction
    a. Atomic absorption
  6. Ammonium oxalate extraction
    a. Atomic absorption
  7. Dithionite-citrate extraction
    a. Atomic absorption
H. Extractable acidity
  1. $BaCl_2$-triethanolamine I
    a. Back-titration with HCl
  2. $BaCl_2$-triethanolamine II
    a. Back-titration with HCl
  3. KCl-triethanolamine
    a. Back-titration with NaOH
I. Carbonate
  1. Saturation extract
    a. Acid titration
J. Bicarbonate
  1. Saturation extract
    a. Acid titration
K. Chloride
  1. Saturation extract
    a. Mohr titration
    b. Potentiometric titration
L. Sulfate
  1. Saturation extract
    a. Gravimetric, $BaSO_4$
    b. EDTA titration
  2. NH_4OAc extraction
    a. Gravimetric, $BaSO_4$
M. Nitrate
  1. Saturation extract
    a. PDS acid colorimetry
    b. Diphenylamine
N. Calcium
  1. Saturation extract
    a. EDTA titration
    b. Atomic absorption
  2. NH_4OAc extraction
    a. EDTA-alcohol separation
    b. Oxalate-permanganate I
    c. Oxalate-permanganate II
      Fe, Al, and Mn removed
    d. Oxalate-cerate
    e. Atomic absorption
  3. NH_4Cl-EtOH extraction
    a. EDTA titration
  4. KCl-TEA extraction
    a. Oxalate-permanganate
    b. EDTA titration
    c. Atomic absorption
O. Magnesium
  1. Saturation extract
    a. EDTA titration
    b. Atomic absorption
  2. NH_4OAc extraction
    a. EDTA-alcohol separation
    b. Phosphate titration

6. CHEMICAL ANALYSES (cont.)
    c. Gravimetric, $Mg_2P_2O_7$
    d. Atomic absorption
  3. NH_4Cl-EtOH extraction
    a. EDTA titration
  4. KCl-TEA extraction
    a. Phosphate titration
    b. EDTA titration
    c. Atomic absorption
P. Sodium
  1. Saturation extract
    a. Flame photometry
    b. Atomic absorption
  2. NH_4OAc extraction
    a. Flame photometry
    b. Atomic absorption
Q. Potassium
  1. Saturation extract
    a. Flame photometry
    b. Atomic absorption
  2. NH_4OAc extraction
    a. Flame photometry
    b. Atomic absorption
R. Sulfur
  1. $NaHCO_3$ extract, pH 8.5
    a. Methylene blue
  2. HCl release (sulfide)
    a. Iodine titration
S. Total phosphorus
  1. Perchloric acid digestion
    a. Molybdovanadophosphoric acid colorimetry
7. MINERALOGY
A. Instrumental analysis
  1. Preparation
    a. Carbonate removal
    b. Organic-matter removal
    c. Iron removal
    d. Particle-size fractionation
    e. PSDA pretreatment
  2. X-ray diffraction
    a. Thin film on glass, solution pretreatment
    b. Thin film on glass, resin pretreatment
    c. Thin film on glass, $NaPO_3$ pretreatment
    d. Thin film on tile, solution pretreatment
    e. Thin film on tile, resin pretreatment
    f. Thin film on tile, $NaPO_3$ pretreatment
    g. Powder mount, diffractometer recording
    h. Powder mount, camera recording
  3. Differential thermal analysis
B. Optical analysis
  1. Grain studies
  2. Electron microscopy
C. Total analysis
  1. Chemical
  2. X-ray emission spectrography
D. Surface area
  1. Gylcerol retention
8. MISCELLANEOUS
A. Saturated paste, mixed
  1. Saturation extract
    a. Conductivity
    b. Conductivity, quick test
  2. Conductivity, saturated paste
B. Saturated paste, capillary rise
  1. Saturation extract
    a. Conductivity
C. pH
  1. Soil suspensions
    a. Water dilution
    b. Saturated paste
    c. KCl
    d. NaF
    e. $CaCl_2$
D. Ratios and estimates
  1. To total clay
  2. To noncarbonate clay
  3. Ca to Mg (extractable)
  4. Estimated clay percentage
  5. Estimated total salt
E. Soil resistivity
  1. Saturated paste

FIGURE 1.—Code sheet for laboratory methods.

1. SAMPLE COLLECTION AND PREPARATION
   A. Field sampling
      1. Site selection
      2. Soil sampling
         a. Stony soils
         b. Marsh and swamp soils
   B. Laboratory preparation
      1. Standard (airdry)
         a. Square-hole 2-mm sieve
         b. Round-hole 2-mm sieve
      2. Field moist
      3. Carbonate-containing material
      4. Carbonate-indurated material
2. CONVENTIONS
   A. Size-fraction base for reporting
      1. <2-mm
      2. <size specified
   B. Data sheet symbols
      tr: trace, not measurable by quantitative procedure used or less than reportable amount
      tr(s): trace, detectable only by qualitative procedure more sensitive than quantitative procedure used
      - : analysis run but none detected
      -(s): none detected by sensitive qualitative test
      blank: analysis not run
      nd: analysis not run
      <: less than reported amount or none present
3. PARTICLE-SIZE ANALYSES
   A. Particles < 2-mm (pipet method)
      1. Airdry samples
         a. Carbonate and noncarbonate clay
         b. Fine clay
         c. Water-dispersible clay
      2. Moist samples
         a. Carbonate and noncarbonate clay
         b. Fine clay
         c. Water-dispersible clay
   B. Particles > 2-mm
      1. Weight estimates
         a. By field and laboratory weighing
         b. From volume and weight estimates
      2. Volume estimates
4. FABRIC-RELATED ANALYSES
   A. Bulk density
      1. Saran-coated clods
         a. Field state
         b. Airdry
         c. 30-cm absorption
         d. 1/3-bar desorption I
         e. 1/3-bar desorption II
         f. 1/3-bar desorption III
         g. 1/10-bar desorption
         h. Ovendry
      2. Paraffin-coated clods
         a. Ovendry
      3. Cores
         a. Field moist
      4. Nonpolar-liquid-saturated clods
   B. Water retention
      1. Pressure-plate extraction (1/3 or 1/10 bar)
         a. Sieved samples
         b. Soil pieces
         c. Natural clods
         d. Cores
      2. Pressure-membrane extraction (15 bars)
         a. Field-moist samples
      3. Sand-table absorption
      4. Field state
      5. Airdry
   C. Water-retention difference
      1. 1/3 bar to 15 bars
      2. 1/10 bar to 15 bars
   D. Linear extensibility
      1. Dry to moist
   E. Micromorphology
      1. Thin sections
         a. Preparation
         b. Interpretation

4. FABRIC-RELATED ANALYSES (cont.)
         c. Moved-clay percentage
      2. Scanning electron microscopy
   F. Plasticity index
      1. Liquid limit
      2. Upper plastic limit
5. ION-EXCHANGE ANALYSES
   A. Cation-exchange capacity
      1. NH_4OAc, pH 7.0
         a. Direct distillation
         b. Displacement, distillation
      2. NaOAc, pH 8.2
         a. Centrifuge method
      3. Sum of cations
         a. Acidity by $BaCl_2$-TEA, pH 8.2; bases by NH_4OAc, pH 7.0
         b. Sum of bases plus Al
      4. KOAc, pH 7.0
      5. $BaCl_2$, pH 8.2
         a. Barium by flame photometry
      6. NH_4OAc, pH 7.0 leaching tube
         a. Direct distillation
   B. Extractable bases
      1. NH_4OAc extraction
         a. Uncorrected
         b. Corrected (exchangeable)
         c. See 5B4
      2. KCl-TEA extraction, pH 8.2
      3. KCl-TEA, pH 8.2 (revised)
         a. Uncorrected
         b. Corrected (exchangeable)
      4. NH_4OAc, pH 7.0 (modified)
         a. Uncorrected
         b. Corrected (exchangeable)
   C. Base saturation
      1. NH_4OAc, pH 7.0
      2. NaOAc, pH 8.2
      3. Sum of cations
   D. Sodium saturation (exchangeable Na pct.)
      1. NaOAc, pH 8.2
      2. NH_4OAc, pH 7.0
   E. Sodium-adsorption ratio
   F. Calcium saturation
      1. NH_4OAc, pH 7.0
6. CHEMICAL ANALYSES
   A. Organic carbon
      1. Acid-dichromate digestion
         a. $FeSO_4$ titration
         b. CO_2 evolution, gravimetric
      2. Dry combustion
         a. CO_2 evolution I
         b. CO_2 evolution II
      3. Peroxide digestion
         a. Weight loss
   B. Nitrogen
      1. Kjeldahl digestion
         a. Ammonia distillation
      2. Semimicro Kjeldahl
         a. Ammonia distillation
   C. Iron
      1. Dithionite extraction
         a. Dichromate titration
         b. EDTA titration
      2. Dithionite-citrate extraction
         a. Orthophenanthroline colorimetry
         b. Atomic absorption
      3. Dithionite-citrate-bicarbonate extraction
         a. Potassium thiocyanate colorimetry
      4. Pyrophosphate-dithionite extraction
      5. Sodium-pyrophosphate extraction
         a. Atomic absorption
      6. Ammonium oxalate extraction
         a. Atomic absorption
   D. Manganese
      1. Dithionite extraction
         a. Permanganate colorimetry
   E. Calcium carbonate
      1. HCl treatment
         a. Gas volumetric
         b. Manometric
         c. Weight loss

FIGURE 1.—Code sheet for laboratory methods—Continued

435-024 O - 72 - 2

SCS-421
10-64

U. S. DEPARTMENT OF AGRICULTURE
SOIL CONSERVATION SERVICE

SOIL Hayter silt loam SOIL Nos. 863Ky-74-6 LOCATION McCreary County, Kentucky

SOIL SURVEY LABORATORY Beltsville, Maryland LAB. Nos. 63776 - 63781

Depth (in.)	Horizon	1B1b Total Sand (2-0.05)	Total Silt (0.05-0.002)	Total Clay (< 0.002)	Sand: Very coarse (2-1)	Sand: Coarse (1-0.5)	Sand: Medium (0.5-0.25)	Sand: Fine (0.25-0.1)	Sand: Very fine (0.1-0.05)	Size class and particle diameter (mm) 3A1 Silt: 0.05-0.02	Silt: Int. III (0.02-0.002)	Silt: Int. II (0.2-0.02)	(2-0.1)		3B2 >2, Vol pct. of whole soil	Coarse fragments 3B1 >2, Wt pct. of whole soil	2-20	20-75
		Pct. of < 2 mm															Pct. of <75mm	
1/2-5	Ap2	15.0	59.0	26.0	3.8	1.9	0.6	1.6	7.1	15.7	43.3	23.9	7.9		23	36	21	-
5-10	B1	15.0	57.4	27.6	3.0	1.9	.6	1.1	8.4	14.6	42.8	23.7	6.6		36	52	22	4
10-19	B21	15.6	57.0	27.4	3.4	1.9	.6	1.5	8.2	14.7	42.3	24.0	7.4		34	47	17	2
19-34	B22t	14.3	57.0	28.7	3.4	2.1	.8	1.2	6.8	13.4	43.6	20.9	7.5		26	37	12	-
34-48	B23t	15.9	53.7	30.4	4.8	2.9	1.0	1.6	5.6	9.2	44.5	15.7	10.3		47	59	16	18
48-60	B3t	24.1	50.8	25.1	8.1	4.9	1.7	2.8	6.6	9.5	41.3	17.8	17.5		51	62	27	7

Depth (in.)	6A1a Organic carbon Pct.	6B2a Nitrogen Pct.	C/N		Carbonate as $CaCO_3$ Pct.	6C1a Ext. iron as Fe Pct.	Bulk density g/cc	4A1e 1/3 bar g/cc	4A1h Oven dry g/cc	4D1 LE Pct.	Water content Pct.	4B1c 1/3 bar Pct.	4B2 15 bar Pct.	4C1 WRD in/hr.		pH 8C1c (1:1) KCl 1N.	8C1a (1:1) H_2O
1/2-5	1.86	0.180	10			2.9		1.36	1.39	0.7		26.6	12.0	0.15		4.4	4.9
5-10	.87	.100	9			2.9		1.35	1.39	0.6		26.8	11.5	.13		3.9	4.6
10-19	.35	.058	6			2.3		1.54	1.61	0.9		21.6	11.1	.11		3.9	5.4
19-34	.21					2.4		1.57	1.63	0.9		21.5	12.0	.11		3.9	5.4
34-48	.22					2.5		1.60	1.63	0.3		21.7	12.4	.08		3.8	5.4
48-60	.10					2.9		1.68	1.75	0.6		18.4	10.1	.07		3.8	5.3

Depth (in.)	Extractable bases 6N2d Ca	6O2b Mg	6P2a Na	5B1a 6Q2a K	6H2a Ext. acidity	CEC 5A3a Sum cations			6O1d Al						Base saturation 5C3 Sum cations Pct.	Pct.
	meq/100 g															
1/2-5	4.3	1.5	0.1	0.5	12.8	19.2			0.4						33	
5-10	1.6	1.1	.1	.2	10.8	13.8			1.5						22	
10-19	1.8	1.6	.1	.2	7.8	11.5			.7						32	
19-34	1.4	2.4	.1	.2	7.8	11.9			1.0						34	
34-48	1.5	3.2	Tr.	.2	7.6	12.5			1.2						38	
48-60	1.1	3.0	Tr.	.2	6.9	13.0			1.2						33	

FIGURE 2.—Laboratory data sheet for Hayter silt loam, McCreary County, Ky.

Soil Type: Hayter silt loam
Soil No.: S63Ky-74-6
Location: McCreary County, Kentucky, North off Hwy. 759 about 2 miles east of U. S. Hwy. 27.
Vegetation and land use: Hickory, persimmon, yellow poplar.
Slope and land form: 50 percent.
Drainage: Well drained.
Parent Material: Colluvium from sandstone and shale.
Sampled by and date: D. P. Franzmeier, E. J. Pedersen, C. R. Gass, L. Manhart, G. Chapman, October 15, 1963.
Described by: J. H. Winsor, C. K. Losche.

Horizon and Beltsville Lab. No.	
O1	1-1/2 to 0 inches. Hardwood leaf litter.
Ap1	0 to 1/2 inch. Very dark grayish brown (10YR 3/2) silt loam; moderate fine granular structure; very friable; 12 percent sandstone fragments (>3 in. diameter); many roots; pH 7.0.
Ap2 63776	1/2 to 5 inches. Brown (10YR 4/3) silt loam; weak medium granular structure; very friable; 12 percent sandstone fragments; many roots; pH 5.0.
B1 63777	5 to 10 inches. Brown (7.5YR 4/4) silt loam; weak to moderate fine subangular blocky structure; friable; 25 percent sandstone fragments; many roots; pH 5.0.
B21 63778	10 to 19 inches. Brown (7.5YR 4/4) silt clay loam/silt loam; moderate medium blocky structure; friable; 25 percent sandstone fragments; common roots; pH 5.0.
B22t 63779	19 to 34 inches. Brown to dark brown (7.5YR 4/4-3/2) silty clay loam; moderate medium blocky structure; friable; common clay films; 20 percent sandstone fragments; few roots; pH 5.0.
B23t 63780	34 to 48 inches. Brown (7.5YR 4/4) silty clay loam; moderate medium subangular blocky structure; friable to firm; 30 percent sandstone fragments; common clay films; few roots; pH 5.0.
B3t 63781	48 to 60 inches. Brown (7.5YR 5/4) silty clay loam; weak to moderate medium subangular blocky structure; friable to firm; common clay films; 35 percent sandstone fragments; few roots; pH 5.0.

Notes: Colors given are for moist soil. The B21 and B23t layers were sampled for the Bureau of Public Roads. Reaction was determined by Soiltex.

FIGURE 3.—Profile description of Hayter silt loam, McCreary County, Ky.

SAMPLE COLLECTION AND PREPARATION

FIELD SAMPLING 1A

Site selection 1A1

Select sample sites that represent the dominant use of the soil to be studied. Locate the site away from roads, fence rows, old farmsteads, and any other features that may have caused aberrant properties. Locate a duplicate profile at a site 1 to 20 miles from the first site and in a different mapping delineation. If a group of sites are sampled in transect to illustrate some genetic variable, duplication is less important since reliability of sampling can be checked within the transect set.

Soil sampling 1A2

Take samples from freshly dug pits and not from road cuts. Dig the pit wide enough to expose one face of a pedon and deep enough to expose part of the C horizon or the control section, whichever is deeper. Describe the pedon and any variations within the pedon. In laterally uniform pedons sample from a face about 50 cm wide. Each sample should be representative of the entire cross section of each horizon. If horizons of a pedon are discontinuous or vary greatly in thickness or degree of expression, collect samples from different parts of the pedon (or different locations on the pit face). If convenient, start sampling at the bottom of the pit.

If coarse fragments >20 mm are present, follow procedures outlined in 1A2a or 1A2b. Do not mix horizons if they are interfingered or discontinuous. If contrasting soil components are so small that they cannot be sampled separately, estimate the proportions of each component and record in the pedon description. Make arbitrary subhorizons if morphologically recognizable subhorizons are more than 25 cm thick in the upper part of the pedon or m re than 50 cm in the lower part. Consider the requirements of the classification system in locating subhorizon boundaries.

For fabric analyses, take samples from the most representative part of the horizon.

Stony soils 1A2a

Volume estimates.—In each horizon or group of horizons estimate the volume percentages of the 20- to 75-mm (¾ in. to 3 in.) and the 75- to 250-mm (3 to 10 in.) fractions. Record the percentages in the pedon description. Collect a 5- to 7-kg sample of the <75-mm fraction and store in an airtight plastic bag if field moisture content is to be determined. Calculate the volume percentages of coarse fractions (3B2).

Weight estimates.—Estimate and record the volume percentage of the >75-mm fraction as outlined in volume estimates. Collect a 15- to 20-kg sample of the <75-mm fraction and weigh. Sieve out and weigh the 20- to 75-mm fraction. Record the weights of the 20- to 75-mm fraction and the <20-mm fraction. Collect a 5- to 7-kg sample from the <20-mm fraction and store in an airtight plastic bag for determination of field moisture content. Calculate the weight percentages of coarse fractions (3B1).

Marsh and swamp soils 1A2b

Remove the surface mat with a spade. Sample the lower depth with a post-hole digger. Transfer the sample immediately to a plastic bag, knead to remove air, and tie. Invert and place inside a second bag. Remove air from this bag and tie. Place both bags inside a third plastic bag and staple shut. Dig and bag rapidly to minimize exposure to air.

LABORATORY PREPARATION 1B

Standard (airdry) material 1B1

Spread the field samples on trays and airdry at 30 to 35° C. Thoroughly mix and roll the sample with a wooden rolling pin to break up clods. Separate, weigh, and discard the >2-mm fractions. Continue rolling and sieving until only coarse fragments that do not slake in water or sodium metaphosphate (3A1) remain on the sieves. Calculate the percentages of the various fractions as described in 3B. If carbon, total nitrogen, extractable iron, gypsum, or calcium carbonate are to be determined, and subsampling problems are evident, grind the <2-mm material between mullite disks to about 80 mesh; otherwise do not grind.

Square-hole 2-mm sieve* [1] 1B1a

Pass sample through a square-hole 2-mm sieve.

Round-hole 2-mm sieve 1B1b

Pass the sample through a round-hole 2-mm sieve.

[1] Methods marked with an asterisk throughout this report are not being used at the present time. They are included because many of the published laboratory data have been determined by these methods.

Field-moist material **1B2**

Force the field-moist sample through a 2-mm screen by hand, using a large rubber stopper. Place the prepared samples in polyethylene bags and seal in quart fruit jars. Airdry part of the sample and grind to 80 mesh for carbon, extractable iron, gypsum, calcium carbonate and nitrogen determinations.

Carbonate-containing material **1B3**

Procedure

Prepare dialysis membrane sacks from 5½-inch cellulose casing (Visking Company), using large rubber bands to tie the bottoms. Place the sample (as much as 6 kg if very gravelly and highly calcareous) in a dialysis membrane and add about 1 liter pH 5, *N* NaOAc buffer. Tie the top of the dialysis membrane around a glass breather tube 4 inches long and hang the assembly in a 60-liter reservoir of buffer held in a 20-gallon plastic garbage can. If carbonate is dissolving, knead the membrane to release bubbles of CO_2. When bubbles of CO_2 no longer form on kneading, open the dialysis membrane and use strong acid to check the coarser material for carbonate coatings (carbonate remains longer in the coarser material). When sample is free of carbonate, desalt it by dialysis against tap water flowing continuously through a large plastic garbage can. Check the ionic concentration inside the membrane by measuring conductivity of a small volume of the supernatant liquid poured out through the breather tube. Continue dialysis until the salt concentration is less than 10 meq per liter.

The procedure used to dry the sample depends on whether the particles larger than 2 mm have been removed before buffer treatment. If they have been removed, withdraw excess water from the sample in the membrane with filter candles. Knead the membrane to mix the sample and place it in contact with ethanol to desiccate further. Remove the sample from the membrane and airdry.

If the buffer-treated sample contains particles larger than 2 mm, wet sieve the sample through a 2-mm sieve. Then dry sieve the material remaining on the sieve (>2 mm) and add the <2-mm fraction from this sieving to the <2-mm fraction separated by the wet sieving. Remove most of the water from the <2-mm fraction with filter candles. Use ethanol to transfer the samples to shallow pans and dry. Ethanol prevents aggregation of clay into durable flakes during drying.

Discussion

The time required for carbonate removal varies greatly, depending on particle size, percentage and type of carbonate, and sample size. Samples from horizons strongly cemented by carbonate have required as long as 2 months. The concentration of alkaline-earth ions in the buffer greatly affects the rate of carbonate removal. Changing the buffer in the reservoir well before the buffer capacity has been exhausted, thereby keeping the alkaline-earth ion concentration low, increases the rate markedly. Desalting usually takes about 4 days.

For carbonate-cemented horizons, the whole sample, not just the <2-mm material, must be buffer treated. Furthermore, for horizons without carbonate cementation, buffer treatment of the whole sample has the advantage of washing the >2-mm skeletal material free of adhering fines and organic material. This problem is considered further in 1B4.

For very gravelly horizons, large samples (several kilograms) are necessary for buffer treatment because of the small amount of <2-mm material. Using large samples also increases precision of the >2-mm percentage.

References

Grossman and Millet (1961).

Carbonate-indurated material containing coarse fragments **1B4**

Break the field sample to get several representative subsamples. Remove the carbonate from one subsample by acid treatment and separate the coarse fragments from the fine earth (1B3). Weigh the two fractions. Use the noncarbonate fine earth for the standard characterization and mineralogical measurements (sections 6 and 7).

Grind another subsample of the whole field sample to pass 80-mesh sieve. Determine the carbonate content (weight) of this whole ground subsample (6E).

These weights can be used to calculate the $CaCO_3$ percentage of the fine earth. Any analytical value based on the noncarbonate fine earth can be converted to the whole-soil basis as well as to the basis of the carbonate-containing fine earth.

CONVENTIONS

SIZE-FRACTION BASE FOR REPORTING DATA 2A

Particles <2 mm 2A1

Unless otherwise specified, report all data on the basis of the <2-mm material.

Particles <specified size>2 mm 2A2

The maximum coarse-fragment size for the >2-mm base varies. The base usually includes fragments as large as 75 mm (3 inches) if present in the soil. The maximum size for fragments larger than 75 mm is decided during sampling. It is established either because of the difficulty in handling larger material or because, by definition, soil does not include material larger than 250 mm (10 inches) in diameter.

Record the particle size set as the maximum in parentheses in the column heading. The base used to calculate the >2-mm percentages reported in the column includes all material in the sample smaller than the size recorded in the heading.

DATA SHEET SYMBOLS 2B

The following symbols are used or have been used for trace and zero quantities and for samples not tested.

tr, Tr	Trace, either not measurable by quantitative procedure used or less than reportable amount.
tr(s)	Trace, detected only by qualitative procedure more sensitive than quantitative procedure used.
–	Analysis run but none detected.
–(s)	None detected by sensitive qualitative test.
blank	Analysis not run.
nd	Not determined, analysis not run.
<	Either none present or amount is less than reported amount, e.g., <0.1 is in fact <0.05 since 0.05–0.1 is reported as 0.1.

PARTICLE-SIZE ANALYSES

PARTICLES <2 mm (PIPET METHOD) 3A

Airdry samples 3A1

Apparatus

Electrolytic beakers, 250-ml.

Pasteur-Chamberlain filter candles, fineness "F."

Nursing bottles, 8-oz, or centrifuge bottles, flat-bottomed, 250-ml.

Shaker, horizontal, 120 oscillations per minute.

Cylinders, 1,000-ml.

Stirrer, motor-driven.

Stirrer, hand.—Fasten a circular piece of perforated brass sheeting to one end of a brass rod; place a wide rubber band around the edge of the brass sheeting to prevent abrasion.

Shaw pipet rack.

Lowy pipets, 12-second filling time.

Asbestos pipe-insulating cover.

Shaker with ½-inch vertical and lateral movements and 500 oscillations per minute.

Weighing bottles.

Set of sieves, as follows:

Sieve opening (mm)	*Specifications*
1.0	Perforated brass plate, round holes, No. 3 straight, 0.04-inch diameter holes, 240 holes per square inch.
0.5	Perforated brass plate, round holes, No. 00 staggered, 0.02-inch diameter holes, 714 holes per square inch.
0.25	60-mesh, Bureau of Standards (Phosphor Bronze wire cloth).
0.177	80-mesh, Bureau of Standards (Phosphor Bronze wire cloth).
0.105	150-mesh, Bureau of Standards (Phosphor Bronze wire cloth).
0.074	200-mesh, Phosphor Bronze wire cloth (added in 1966).
0.047	300-mesh, Phosphor Bronze wire cloth, 0.0015 wire.

Reagents

Hydrogen peroxide (H_2O_2), 30 to 35 percent. Sodium metaphosphate (polyphosphate) ($NaPO_3$).—Prepare according to Tyner (1939). Slowly heat 125 g monosodium phosphate ($NaH_2PO_4 \cdot H_2O$) in a platinum dish to 650° C. Hold at this temperature for 1½ hours. Remove from the furnace and cool the sodium metaphosphate rapidly by pouring it out in narrow strips on a clean marble slab. Prepare the dispersing agent by dissolving 35.70 g sodium metaphosphate and 7.94 g sodium carbonate in 1 liter of water.

Procedure

Removing organic matter.—Place about 10 g airdry soil containing no particles larger than 2 mm in an electrolytic Pyrex beaker. Add about 50 ml water and then add a few milliliters of H_2O_2. Cover the beaker with a watchglass. If a violent reaction occurs, repeat the cold H_2O_2 treatment periodically until no more frothing occurs. Heat the beaker to about 90° C on an electric hot plate. Add H_2O_2 in 5-ml quantities at 45-minute intervals until the organic matter is destroyed as determined visually. Continue heating for about 30 minutes to remove any excess H_2O_2.

Removing dissolved mineral matter.—After the H_2O_2 treatment, place the beaker in a rack and add about 150 ml water in a jet strong enough to stir the sample well. Filter the suspension through a short Pasteur-Chamberlain filter of "F" fineness. Five such washings and filterings are usually enough except for soils containing much coarse gypsum. Remove soil adhering to the filter by gentle back pressure, using finger as policeman. Place the sample overnight in an oven at 105° C, cool in a desiccator, and weigh to the nearest milligram. Transfer the sample to a nursing or centrifuge bottle for dispersion and record the ovendry weight of the beaker. Use the calculated weight of the ovendry H_2O_2-treated sample as the base weight for calculating percentages of the various fractions.

Removing cementing agents (optional).—Treat the sample with about 200 ml of 1*N* sodium acetate buffered at pH 5 to remove $CaCO_3$. When CO_2 bubbles are no longer evident, wash free of salts with a filter candle system. Highly calcareous samples may need a second treatment.

Remove siliceous cementing agents by soaking the sample overnight in 0.1*N* NaOH. Wash free of salts with a filter candle system before proceeding.

Dispersing the sample.—Add 10 ml sodium metaphosphate [2] dispersing agent and transfer to an 8-oz Pyrex glass nursing bottle or a 250-ml flat-bottomed centrifuge bottle, using a funnel, a rubber policeman, and a jet of water. Make the volume to 6 oz. Stopper the bottle and shake overnight on a horizontal reciprocating shaker at 120 oscillations per minute.

Separating sands from silt and clay.—Wash the dispersed sample on a 300-mesh sieve, passing the silt and clay through the sieve into a 1-liter cylinder. Use a clamp and stand to hold

[2] Determine a weight correction for each new solution by using the same pipet to take an aliquot of the dispersing agent diluted 10 to 1,000.

the sieve above the cylinder. Avoid using jets of water in washing the sample. Gently tap the sieve clamp with the side of the hand to facilitate washing. Continue washing until the volume in the cylinder is about 800 ml. Sand and some coarse silt remain on the sieve. It is important to wash all particles of less than 20μ diameter through the sieve. Remove the sieve from the holder, wash the sands into an evaporating dish, and dry at 105° to 110° C. Then place the evaporating dish in a desiccator until convenient to sieve and weigh the contents. Make the silt and clay suspension in the cylinder to 1 liter with demineralized water, cover with a watchglass, and set aside until the pipettings are to be made.

Pipetting.—First pipet the <20μ fraction at a 10-cm depth, varying sedimentation time according to temperature. Next, pipet <2μ fraction after a predetermined settling time (usually 6 to 6½ hours), varying depth according to time and temperature. Use a Lowy 25-ml automatic pipet having a filling time of about 12 seconds. Before each pipetting, stir material in the sedimentation cylinder for 6 minutes with a motor-driven stirrer (8 minutes if suspension has stood for more than 16 hours). Remove stirrer, slip a length of pipe-insulating cover over sedimentation cylinder, and stir the suspension for 30 seconds with a hand stirrer, using an up-and-down motion. Note the time at completion of stirring. About 1 minute before sedimentation is complete, lower the tip of the pipet slowly into the suspension to the proper depth with a Shaw pipet rack. Fill the pipet and empty into a 60-ml weighing bottle having an outside cover. Rinse the pipet into the weighing bottle once. Use a vacuum to dry the pipet for the next sample. Dry the weighing bottle in an oven at 95° to 98° C and then dry further for about 4 hours at 105° C. The initial drying at a lower temperature prevents spattering. Cool the weighing bottle in a desiccator containing phosphorus pentoxide (P_2O_5) as a desiccant. Weigh.

Sieving and weighing the sand fractions.—Weigh the dry sands, including some coarse silt, and brush into a nest of sieves (include an 80-mesh sieve to obtain ISSS fraction I). Shake for 3 minutes on a shaker having ½-inch vertical and lateral movements and making 500 oscillations per minute. Record the weights of the individual sand fractions. If the sum of the weights of the size fractions is equal to the total weight, assume that there has been no error in weighing.

Calculations

Pipetted fractions:

$$\text{Percentage of pipetted fractions} = (A-B)KD$$

where

A = weight (g) of pipetted fraction

B = weight correction for dispersing agent (g)

$$K = \frac{1{,}000}{\text{ml in pipet}}$$

$$D = \frac{100}{\text{g of } H_2O_2\text{-treated ovendry total sample}}$$

The <20μ fraction minus <2μ fraction equals ISSS fraction III. Subtract the sum of the percentages of sand and clay from 100 to get USDA silt.

Sand fractions:

$$\text{Percentage of sieved fractions} = \text{weight (g) of fraction on sieve} \times D$$

References

Kilmer and Alexander (1949), Kilmer and Mullins (1954), and Tyner (1939).

Carbonate and noncarbonate clay **3A1a**

Procedure

Check for calcium or magnesium carbonate in the clay fraction by adding a few drops of 6*N* HCl to the dried residue from the aliquot withdrawn during the regular pipet analysis. If carbonate is present, withdraw a second aliquot of clay. For a greater precision, use a 50-ml pipet to withdraw the second aliquot. Place the aliquot in a suitable reaction flask. Evaporate to dryness or near dryness and determine carbonate by an appropriate procedure (6E).

Calculations

Carbonate clay (pct. <2 mm)

$$Cc = \frac{\text{g } CO_2}{\text{g sample}} \times \frac{\text{ml in cylinder}}{\text{ml in pipet}} \times 227.4$$

Noncarbonate clay (pct. <2 mm)

$$Nc = \text{Total clay (pct. <2 mm)} - Cc$$

Noncarbonate clay (pct. noncarbonate <2 mm)

$$= \frac{Nc}{1 - \frac{\text{Total carbonate}}{100}}$$

References

Shields and Meyer (1964).

Fine clay (<0.2μ) **3A1b**

Apparatus

International No. II centrifuge, head No. 976.

500-ml centrifuge bottles.

Shaw pipet rack.

125-ml Erlenmeyer flasks or weighing bottles (tared to 0.1 mg).

Procedure

Mix contents of cylinder following pipet procedure. Allow to stand for 15 minutes and transfer enough suspension to fill a 500-ml centrifuge bottle to 8-cm depth (≈250 ml). Mix contents of bottle and centrifuge at 1,500 rpm, adjusting the time according to the temperature as follows:

435-924 O - 72 - 3

Temperature	Minutes
20° C	39.2
25° C	34.9
30° C	31.2
35° C	28.1
40° C	25.5

Adjust pipet assembly for 3-cm sampling depth. Gently move centrifuge under pipet rack and lower pipet directly into a centrifuge bottle. Withdraw 25 ml in 12 to 15 seconds (avoid turbulence) and transfer to tared Erlenmeyer flask or weighing bottle. Dry at 110° C, cool in P_2O_5 desiccator and weigh.

Calculations

Proceed as in 3A1.

Water-dispersible clay **3A1c**

Proceed as in 3A1 except eliminate peroxide and metaphosphate treatments. Shake sample overnight in distilled water.

Moist samples **3A2**

For soils in which drying affects dispersion, it may prove convenient to take a pipet sample to estimate the total weight of the sample. The procedure is the same as the standard procedure except that the treated sample is not ovendried. Pipet 50 ml at 20-cm depth at time zero while the suspension is still turbulent. Use the ovendry weight of the aliquot to calculate the total weight of the <0.05-mm fraction. Add this weight to the total weight of the sands to get the total weight of the sample.

Carbonate and noncarbonate clay **3A2a**

Proceed as in 3A1a except use field-moist sample.

Fine clay **3A2b**

Proceed as in 3A1b except use moist samples.

Water-dispersible clay **3A2c**

Proceed as in 3A1c except use moist samples.

PARTICLES >2 mm **3B**

Fractions >2 mm can be reported on different bases, e.g., fractions <20 mm, <75 mm, or <250 mm, etc. Unless otherwise specified, individual fractions <75 mm are reported on a <75-mm basis and the total >2 mm fraction is reported on a whole soil (<250-mm) basis. Details on reporting procedures are given in 2A.

The usual laboratory sample of about 5 kg provides reliable weight estimates of fractions <20 mm in diameter. A 15- to 20-kg sample is required for a reliable weight estimate of the 20- to 75-mm fraction; therefore, it is more convenient to make this estimate in the field. A reliable weight estimate of the 75- to 250-mm fraction requires more than 100 kg; therefore, it is usually calculated from a volume percentage estimate. If weight estimates cannot be made for the 20- to 75-mm fractions, volume percentage estimates can be used to calculate weight percentage estimates.

Weight stimates **3B1**

By field or laboratory weighing **3B1a**

Weigh and sieve the entire horizon sample through 75-mm and 20-mm screens. Weigh the >75-mm and 75- to 20-mm fractions. Calculate the <20-mm fraction by subtraction. Take a subsample of the <20-mm fraction for laboratory processing. Determine the airdry weight of <20-mm sample and correct the total sample weight for the loss in water from field conditions. Separate and weigh the 2- to 5- and 5- to 20-mm fractions. Record these fractions as percentage of <20 mm. Also report these fractions as percentage of <75 mm and percentage of <250 mm (if applicable).

If the fine earth adheres to the larger particles, wash the coarse material and apply the appropriate corrections.

From volume and weight estimates **3B1b**

If visual field volume estimates are made for fractions >75 mm and weight estimates for the fragments between 2 and 75 mm, convert the weight percentages to volume percentages by applying bulk density and particle density data. Combine these calculated volume estimates with the visual field volume estimates to give a combined volume estimate. Use the following equation to convert all fractions to weight percentages of the combined fractions. The terms are defined in 3B2.

$$\text{Percentage} > 2 \text{ mm (weight basis)} = \frac{100\, Dp\,(x)}{Dp(x) + Db_m(1-x)}$$

This equation can be used to calculate any individual fragment fractions >j mm by substituting an appropriate value of Db_m representing the fabric <j mm (where j may be any size fraction).

Volume estimates **3B2**

Record the volume percentage of material >20 mm (¾ in.), >75 mm (3 in.) or >250 mm (10 in.) in the pedon description. If larger stones or boulders are not included in making the volume estimates, note this in the pedon description.

To arrive at a value for the volume percentage of all material >2 mm, convert the weight estimates of the fine earth to volume estimates and then combine.

$$Cm = \frac{Dp(1-y)(1-x)}{Dp(1-y) + Db_m(y)}$$

where

Dp = Density of particles (assumed to be 2.65 g/cc unless noted).

Db_m = Bulk density of the moist fine-earth fabric (4A1)

$$x = \frac{\text{vol fragments} > i \text{ mm}}{\text{vol whole soil}}$$

$$y = \frac{\text{wt material between 2 mm and } i \text{ mm}}{\text{wt material} < i \text{ mm}}$$

i = the size above which volume estimates are made and below which weight percentages are determined, usually 75 mm or 250 mm.

Cm has been reported on some data sheets. It is referred to as the coarse-fragment conversion factor. This value multiplied by laboratory data converts laboratory results from a weight basis to a field volume basis. *Cm* times 100 is the volume percentage of fine-earth fabric in the whole soil. Volume percentage of >2 mm material is the difference between this value and 100.

$$>2 \text{ (pct. by vol)} = 100\ (1 - Cm)$$

For some soils the weight of the fine earth per unit volume of the whole soil is reported. It is calculated by multiplying *Cm* by Db_m. Values for x are reported in the pedon description and those for y on the data sheets.

FABRIC-RELATED ANALYSES

BULK DENSITY 4A

Density is defined as mass per unit volume. Soil density differs from most density in that the mass of the liquid phase is excluded. Also, th volume over which the weight is determined includes interparticle space. Because of these irregularities, soil density has been called bulk density, Db, to distinguish it from the more usual density that is based on intraparticle volume only. Furthermore, since the volume of a given mass of soil depends on its water content, subscripts are added to designate the moisture condition when the measurement was made. Thus Db_m is the bulk density of a moist sample, $Db_{\frac{1}{3}}$ is the bulk density of a clod sample equilibrated at ⅓-bar tension, and Db_d is the bulk density of a dry sample.

Saran-coated clods 4A1

Reagents

Methyl ethyl ketone.

Dow Saran F310.—The Saran resin dissolves readily in acetone or methyl ethyl ketone. In this method methyl ethyl ketone is used as a solvent because it is less soluble in water than is acetone and there is less penetration of the Saran-solvent solution into a moist clod. Saran-solvent ratios of 1:4 to 1:8 are used, depending on the porosity of the soil to be coated.

To mix the plastic solution, fill a weighed container with solvent to about three-fourths its volume. From the weight of the solvent, calculate the weight of resin required to obtain a predetermined resin-solvent ratio and add to the solvent. Since the solvent is flammable and its vapors form explosive mixtures with air, mix the plastic with an air-powered or nonsparking electric stirrer under an exhaust hood.[3] If a high-speed stirrer is used, the resin dissolves in about 1 hour. Metal cans (1 gal) are satisfactory containers for mixing and storing the plastic. Keep the containers tightly closed to prevent evaporation of the solvent.

Procedure

Collect natural clods of about 50 to 200 cc. Chip a piece of soil larger than the clod from the face of a sampling pit with a spade. From this piece remove a clod by gently cutting or breaking off protruding peaks and material sheared by the spade. If roots are present, they can be cut conveniently with scissors. In some soils, clods can be removed directly from the face of a pit with a knife or spatula. No procedure for taking clod samples fits all soils; the procedure must be adjusted to meet the conditions in the field at the time of sampling.

Hold the separated clod by a thread or fine wire and immerse it briefly in the plastic solution. For convenience, either of two concentrations of plastic solution is usually used—a 1:7 solution for the majority of soil samples or a 1:4 solution for clods that have large pores. Then suspend the immersed clod from a line to allow the coating to dry, usually 15 to 30 minutes.[4] If bulk density at field-moisture content is desired, store the clods in waterproof plastic bags as soon as the coating dries since the coating is permeable to water vapor. Although the coating keeps the clods intact, they may be crushed in transport unless they are packed in rigid containers.

In the laboratory apply additional coatings of plastic to make the clod waterproof and to prevent its disruption during wetting. Then weigh the clod, either in its natural moisture condition or in an adjusted moisture condition (e.g. ⅓-bar tension) in air and in water to obtain its volume by Archimedes' principle. Subsequent changes in moisture condition and volume of the soil sample can be followed by reweighing the coated clod in air and in water. Finally, weigh the ovendry clod in air and in water.

Be careful not to lose any soil material because the weight of material lost is calculated as soil moisture and calculated bulk densities depend on the final ovendry weight of the clod.

Bulk-density values determined by this method are reported on the basis of the fine-earth fabric. Determinations are made on clod samples that may contain particles larger than 2 mm, but after the measurement is made, the weight and volume of the coarse fraction are subtracted. The remainder consists of the weight of the <2-mm material and the volume of these fine-earth particles and the pore space associated with them.

[3] Information on the safe handling and use of methyl ethyl ketone is available in Chemical Safety Data Sheet SD-83, Manufacturing Chemists' Association, Inc., 1825 Connecticut Avenue NW., Washington, D.C.

[4] Clods coated in this way can be transported to the laboratory and examined microscopically in an undisturbed state.

Sometimes it is necessary to correct for weight and volume of the plastic coating. The coating has a density of about 1.3 g per cubic centimeter and it loses 10 to 20 percent of its airdry weight on ovendrying at 105° C. Thus, the amount of correction becomes smaller as bulk density of the soil approaches density of the coating and as moisture content of the soil approaches the weight loss of the coating.

Calculations

The example given is for a clod equilibrated at ⅓-bar tension.

$$Db_{\frac{1}{3}} = \frac{\text{wt clod}_{od} - \text{wt} > 2\text{ mm} - \text{wt coat}_{od}}{\text{vol clod}_{\frac{1}{3}} - \text{vol} > 2\text{ mm} - \text{vol coat}}$$

$$Db_{od} = \frac{\text{wt clod}_{od} - \text{wt} > 2\text{ mm} - \text{wt coat}_{od}}{\text{vol clod}_{od} - \text{vol} > 2\text{ mm} - \text{vol coat}}$$

$$W_{\frac{1}{3}} = \frac{\text{wt clod}_{\frac{1}{3}} - \text{wt clod}_{od} - (\text{wt coat}_{od} - \text{wt coat}_{od})}{\text{wt clod}_{od} - \text{wt} > 2\text{ mm} - \text{wt coat}_{od}}$$

where

$Db_{\frac{1}{3}}$ is bulk density of <2-mm fabric at ⅓-bar tension in grams per cubic centimeter

Db_{od} is bulk density of <2-mm fabric at ovendryness in grams per cubic centimeter

$W_{\frac{1}{3}}$ is water content of fine earth at ⅓-bar tension as weight percentage

wt clod_{od} is weight of ovendry coated clod

wt $\text{clod}_{\frac{1}{3}}$ is weight of coated clod equilibrated at ⅓-bar tension

vol clod_{od} is volume of ovendry coated clod

vol $\text{clod}_{\frac{1}{3}}$ is volume of coated clod equilibrated at ⅓-bar tension

vol >2 mm is volume of material >2 mm separated from clod after ovendrying

wt >2 mm is weight of material >2 mm separated from clod after ovendrying

wt coat_{od} is weight of Saran coating before ovendrying

wt coat_{od} is weight of Saran coating after ovendrying

vol coat is volume of Saran coating (estimated).

It is not always necessary to correct for the weight and volume of the Saran coating.

References

Brasher et al. (1966).

Field state (Db_f) 4A1a

When Saran is dry (approximately 20 min), record weight of the clods suspended in air and in water. The difference is the "field-state" volume. Determine ovendry weight and calculate bulk density as described in 4A1.

Airdry (Db_d) 4A1b

After measuring field-state volume, place clods in a drying room kept at 90° F. Weigh a few clods each day until they reach a constant weight. Assume then that all the clods are airdry. Coat them again with Saran and measure "airdry" volume as described in 4A1a. Determine ovendry weight and calculate bulk density as described in 4A1.

30-cm absorption (Db_{30}) 4A1c

After measuring airdry volume, remove a patch of the Saran coating from one side of each clod. Next place the clods on a sand tension table with the exposed side in contact with very fine sand that has been equilibrated to 30-cm water tension. Again weigh a few clods each day until they reach constant weight and assume that all the clods are at 30-cm water tension. Most clods reach equilibrium in 7 to 10 days. Remove the clods from the tension table and coat with Saran until waterproof. Measure volume of the clods and calculate bulk density as described in 4A1.

⅓-bar desorption I ($Db_{\frac{1}{3}}$) 4A1d

After measuring airdry volume, remove a patch of Saran coating from a flat face of each clod. Place the exposed area in firm contact with a tension table of very fine sand and equilibrate to 5-cm water tension. When clods have reached a constant weight (7 to 10 days), remove them and record the 5-cm weight in air. This value should be greater than the subsequent ⅓-bar desorption value. Cover a pressure porous plate with 0.5 cm silt, saturate with water, and desorb to about $\frac{1}{10}$ bar. Place a layer of industrial tissue (Kimwipe) over the silt and press the exposed faces of the clods onto the tissue. Desorb at ⅓-bar suction until water ceases to discharge (about 7 days). Measure volume of the clods and calculate bulk density as described in 4A1.

⅓-bar desorption II ($Db_{\frac{1}{3}}$) 4A1

Cut a flat surface on the coated field-moist clods with a sharp knife or diamond saw. Seat the clods on saturated ceramic plates with the flat surface in contact with the plates. Place the plates in pans and add water to just cover the surface of the plates. After the clods become wet by capillary movement, place the plates in a pressure cooker and equilibrate at ⅓ bar. After equilibration, carefully remove the clods from the plates and dip in Saran until waterproof. Measure volume of the clods and calculate bulk density as described in 4A1.

⅓-bar desorption III ($Db_{\frac{1}{3}}$) 4A1f

Proceed as in 4A1e except prewet the clods at 10-cm tension on porous bricks (cheesecloth layer between clod and brick) instead of saturating them on ceramic plates.

$\frac{1}{10}$-bar desorption ($Db_{\frac{1}{10}}$) 4A1g

Proceed as in 4A1d, e, or f except make final desorption at $\frac{1}{10}$ bar.

Ovendry (Db_d) 4A1h

After determining moist volume, ovendry the clods at 105° C for about 48 hours. Record the

ovendry weight and volume and calculate bulk density as described in 4A1.

Paraffin-coated clods* **4A2**

Ovendry (Db_d) **4A2a**

Ovendry the clods, coat with paraffin, and weigh in water and in air. Calculate bulk density as follows:

$$Db_d \text{ (g/cc)} = \frac{\text{Wt in air} - \text{wt} > 2 \text{ mm in clod}}{(\text{Wt in air} - \text{wt in water}) - \frac{\text{wt} > 2\text{mm}}{2.65}}$$

Cores **4A3**

Field moist **4A3a**

To collect cores, prepare a flat surface in the sampling pit, either horizontal or vertical, at the desired depth. Press the core sampler into the soil, using due caution to prevent compaction. Remove the core in the aluminum liner and place both in a moisture can for transport to the laboratory. If the soil is too loose to remain in the core, use the core sampler without liner and deposit the entire sampler in a moisture can. If the core contains no coarse fragments more than 10 to 20 mm in diameter, and there are no large cracks in the horizon, bulk density is presumed to be equal to the horizon bulk density at field-moisture state.

Calculations

$$\text{Bulk density (g/cc)} = \frac{\text{ovendry wt core (g)}}{\text{vol core (cc)}}$$

Nonpoplar-liquid-saturated clods* **4A4**

Procedure

Place a natural clod in a nonpolar liquid of low viscosity, e.g., high-purity kerosene. Evacuate under vacuum until bubbles cease to appear and weigh the clod suspended in the nonpolar liquid. Remove the clod, place it on a sand table under 3-cm tension against the nonpolar liquid to drain off excess nonpolar liquid, and weigh it in air. The difference in weight of the clod in air and suspended in the nonpolar liquid divided by the density of the nonpolar liquid is the clod volume.

Determine the ovendry weight and calculate bulk density as in 4A1. The difference between the clod's initial weight before immersion in the nonpolar liquid and its ovendry weight is the moisture content.

References

Rennie (1957).

WATER RETENTION **4B**

If clay within a fragment swells, it tends to push the structure apart, creating more pore spaces that hold water at low tension. In a natural fragment of reasonable size this swelling is contained to some extent by the overall coherence of the unit. In very small units, such as the <2-mm fragments of a sieved sample, there are few restraints to such swelling. The result is that moisture-release curves show that sieved samples hold more water at 1/10 or 1/3 bar than larger pieces or clods. The error resulting from estimating water held at low tension in sieved samples is such that the soil appears to hold more water than it has pore space. Hence, only soil pieces or coated clods are used to estimate moisture retention at 1/10 and 1/3 bar except for nonswelling soils, soils of textures coarser than loamy sand, and some sandy loams.

References

Young and Dixon (1966).

Pressure-plate extraction (1/3 or 1/10 bar) **4B1**

Apparatus

Pressure-plate apparatus.

Retainer rings, approximately 1 cm high and 4 cm in diameter to hold teaspoon-size samples.

Balance, drying oven, and moisture boxes.

Sieved samples **4B1a**

Procedure

Place duplicate teaspoon-size samples in retainer rings on a porous plate. Cover the plate with water to wet the samples from below. Cover with a sheet of plastic and let stand overnight. Remove excess water and place the plate in a pressure cooker. Apply the required pressure until no more water is extracted (usually 6 days). After extraction, quickly transfer the samples to moisture tins, weigh, dry at 105° C, weigh again, and report moisture content as percentage of ovendry weight.

References

Richards (1954).

Soil pieces **4B1b**

Procedure

Make desorption measurements of soil pieces concurrently with the sieved-sample measurements. Cover the sieved samples in retainer rings with small squares of industrial tissues (Kimwipes). Place the soil pieces (about 2.5 cm in diameter) on the tissues before adding water to the plate. Proceed as in 4B1a. If the soil pieces contain >2-mm material, wet sieve and weigh the ovendry >2-mm material. Report moisture content as percentage of ovendry weight of <2-mm material.

References

Young (1962).

Natural clods **4B1c**

Determine moisture content of clods prepared for bulk-density measurement (4A1). For precise measurement it may be necessary to correct for the weight of the Saran coating.

Cores* **4B1d**

Proceed as in 4B1a except use core samples in their collecting rings.

Pressure-membrane extraction (15 bars) 4B2

Apparatus

Pressure-membrane apparatus with sausage-casing membrane.

Rubber soil-retaining rings 1 cm high and about 6 cm in diameter that hold about 25 g soil.

Balance, drying oven, and moisture boxes.

Procedure

Install a wet cellulose membrane in the pressure apparatus. Add water and fill the retainer rings in duplicate with <2-mm soil. Cover with a plastic sheet, and allow samples to soak overnight. Remove excess water and close the apparatus. Gradually apply pressure in increments of 25 psi at intervals of about 15 minutes to the pressure desired. After a few hours to 1 day, apply a 4-psi pressure differential to the rubber diaphragm at the top of the chamber. Remove samples when cessation of outflow indicates that equilibrium has been reached (2 to 6 days). Quickly transfer samples to moisture cans and determine moisture content. Report as percentage of ovendry weight.

References

Richards (1954).

Field-moist samples **4B2a**

Proceed as in 4B2 except use field-moist samples instead of airdry samples.

Sand-table absorption 4B3

Saran-coated clods that have been equilibrated on a sand table to determine bulk density (4A) can also be used to determine water content at these tensions.

Field-state moisture 4B4

Clods or mixed samples taken directly into the laboratory with due precaution to prevent moisture loss can be used to estimate water content at time of sampling.

Airdry moisture 4B5

Determine moisture content of airdry clods by ovendrying at 105° C.

WATER-RETENTION DIFFERENCE 4C

B tween 1/3-bar (or 30-cm) and 15-bar tension 4C1

$$WRD\ (\text{g/cc}) = \frac{(W_{\frac{1}{3}} - W_{15})(Db_{\frac{1}{3}})Cm}{100}$$

where

WRD = Weight (g) of water retained in 1 cc of whole soil between ⅓-bar and 15-bar tension (can be converted to and usually reported as inches of water per inch of soil).

$W_{\frac{1}{3}}$ = Weight percentage of water retained at ⅓-bar (or 30-cm) tension (4B1c)

W_{15} = Weight percentage of water retained at 15-bar tension (4B2)

$Db_{\frac{1}{3}}$ = Bulk density of the fine-earth fabric at ⅓-bar tension (4A1)

$Cm = \frac{\text{Vol moist} < \text{2-mm fabric}}{\text{Vol whole soil}}$ (3B2)

Between 1/10-bar and 15-bar tension 4C2

Same as 4C1 except change ⅓ bar to 1/10 bar.

Linear extensibility (LE) 4D

Linear extensibility is a measure of the change in clod dimension on going from a dry to a moist state. It has also been expressed as *COLE* (coefficient of linear extensibility). $COLE = LE \div 100$.

$$LE\ (\text{pct.}) = 100\left[\frac{L_m - L_d}{L_d}\right]$$

where

L_d = Length of clod, dry

L_m = Length of same clod, moist

Airdry or ovendry to 30 cm, 1/3 bar or 1/10 bar tension 4D1

Linear extensibility can be estimated from laboratory bulk-density data and the coarse-fragment conversion factor (Cm).

$$LE\ (\text{pct.}) = 100\left[\left(\frac{1}{Cm\left(\frac{Db_m}{Db_d}\right) + (1 - Cm)}\right)^{\frac{1}{3}} - 1\right]$$

where

$Cm = \frac{\text{Vol moist} < \text{2-mm fabric}}{\text{Vol whole soil}}$ (3B2)

Db_m = Bulk density of the fine-earth fabric at 30 cm, ⅓ bar, or 1/10 bar (4A1)

Db_d = Bulk density of the fine-earth fabric at oven- or air-dryness (4A1)

If there is no coarse material, $Cm = 1$ and the equation reduces to

$$LE\ (\text{pct.}) = 100\left[\left(\frac{Db_d}{Db_m}\right)^{\frac{1}{3}} - 1\right]$$

LE calculated for the fine-earth fabric alone can be referred to as LE_f (or $COLE_f$).

Nomographs for these calculations have been published. Enlarged copies are available from the soil survey laboratories.

References

Franzmeier and Ross (1968), Grossman, et al. (1968), Holmgren (1968).

MICROMORPHOLOGY 4E

Thin sections 4E1

Preparation 4E1a

Apparatus

Metallographic polisher with 8-inch cast-iron laps.
Diamond saw.
Electric oven.
Hotplate with temperature control or a petrographic slide warmer.
Polarizing microscope.
Good source of vacuum.
Necessary accessories and supplies include a desiccator, porcelain crucibles, standard petrographic slides, cover glasses, silicon carbide abrasives, 12-inch squares of thick plate glass, metal probes or dissecting needles, small forceps, and art brush.

Reagents

Canada balsam.
Laminac resin.
Styrene.
Lupersol catalyst.
Flexible collodion.

Collecting samples.—Samples can be collected by any procedure that does not disturb the natural structure. Core samplers are commonly used. Another satisfactory procedure for some soils is using a knife or trowel to carve a clod that fits a tin box or round ice-cream container. Clods selected from bag samples can be used if orientation is of no interest. Large clods can be shipped if packed tightly in boxes. Fill any space around irregular clods in the container with loose soil from the same horizon. For most samples no precautions need be taken to prevent moisture loss unless this affects fragility, since samples usually must be dried before impregnation. The whole core or clod can be impregnated, but better results generally are obtained with specimens 2 by 2 by 2 inches or smaller. Remove specimens from the sample with a small chisel, a probe like an icepick, an ordinary hacksaw, or a jeweler's hacksaw.

Preparing samples.—First dry a soil sample in an oven, preferably overnight or longer at about 80° C and then place it in a desiccator containing $CaCl_2$. Some change in structure may occur with this treatment, but thus far it seems to be impossible to get good impregnation unless the sample is thoroughly dried.

Mixing plastic solution.—There are many good resins on the market; one that has been used in our laboratories is Laminac resin 4110.[5] The diluting solvent is monomeric styrene and the catalyst Lupersol DDW.[6] Add one part Laminac resin 4110 to two parts monomeric styrene (by volume); add Lupersol DDW catalyst to constitute 5 percent (by volume) of the entire solution. The proportions of Laminac and styrene can be varied according to the viscosity needed to insure penetration. Best results are usually obtained with the thickest solution that will penetrate the material; the solution suggested works well with most soils.

Impregnation.—Place the sample in a porcelain vessel with sloping sides and cover with the plastic solution. Then place the dish in a vacuum desiccator and pump all the air from the sample. Do not mistake boiling of the solution under evacuated conditions for air bubbles escaping from the sample material. When impregnation is complete (usually about 5 min), remove the crucible from the desiccator and leave the specimen at room temperature overnight. The solution begins to jell in about an hour if the right proportions are used. Then place the specimen in an oven at about 40° C. Raise the temperature 20° C every hour until 100° C is reached. Allow the hardened block to cure at 100° C or slightly less for about an hour. Remove the hardened plastic block from the crucible by cooling it quickly in cold water until it shrinks away from the sides of the crucible. The block is then ready for sectioning.

Cutting and grinding.—Cut the sample block into sections about ½-inch thick and small enough to fit on a regular petrographic slide. Grind one surface smooth on the revolving lap, using successively finer abrasives until the surface is highly polished. After mounting the chip, it is best to move the chip or slide around the lap in a direction opposite to the direction of lap rotation as you grind. This helps insure grinding all parts of the specimen at the same rate and also distributes the abrasive well on the lap. Some experience is required to determine the mixture of abrasive and water that gives the best results for each grade of abrasive. If the sample surface tends to pull apart or to react with water, it may be necessary to dry and reimpregnate the small chip or to polish it by hand on a glass plate. Wash the sample free of all abrasive material and dry thoroughly.

Mounting.—Heat a small amount of Canada balsam on a petrographic glass slide. The balsam is ready to receive the sample when a small test amount cooled on the end of a steel probe becomes brittle and shatters under pressure. To keep the balsam from becoming too brittle and accumulating excess air bubbles, be careful not

[5] American Cyanamid Co., New York.
[6] Wallace and Tiernan, Lucidol Division, Buffalo, N.Y.

to overcook it. Place the sample obliquely on the balsam and slowly lower it until parallel with the glass slide. This presses out most of the air bubbles. Remove the slide and sample from the hot plate and lay on a table with the glass slide upward. Maintain slight pressure while the sample and slide are hot to reduce thickness of the balsam between the slide and the sample and to remove any remaining air bubbles. The chip must be perfectly flat and contact with the slide must be uniform or part of the section may be lost before it is ground to the desired thinness (usually about 0.030 mm).

Final grinding.—When the mounted sample is cool, begin the final grinding. Use coarse abrasive until the sample is relatively thin. Then use successively finer abrasives. Care and considerable practice are needed to develop the dexterity required to handle an almost finished section without overgrinding. Examine it frequently under a polarizing microscope during the final stages. If quartz is present in the sample, it can be used to judge thinness. If the sample is about 0.030 mm thick, the quartz interference colors are of the first order, i.e., white, gray, and pale yellow. It is often advisable to finish grinding on ground-glass plates, using the finest abrasive. Wash the section free of abrasive and dry thoroughly.

Plastic coating.—Before putting a protective cover glass over the finished soil section, coat it with very thin plastic. Flexible collodion serves this purpose very well. It is not necessary to coat sections of some minerals or rock materials, but coating soil sections keeps them from breaking apart when heated or when slight pressure is applied to the cover glass to remove any air bubbles. Further, if it becomes necessary to repair the slide for any reason, the thin section is less delicate and can be handled easily. The plastic coat serves also as a protective covering and, if desired, can eliminate use of a cover glass. Its refractive index is about the same as that of balsam. Apply the collodion with a soft-bristle art brush. Use a brush large enough to permit coating with one or two strokes. Too frequent brushings disturb the surface and cause it to appear wavy and out of focus under the microscope. Let the plastic dry.

Seating the cover glass.—Spread a small quantity of precooked balsam over the surface of the thin section and heat until it is liquid. Place a cover glass obliquely on one end of the section and lower it very slowly. If any air bubbles remain, squeeze them out by pressing lightly on the cover glass. Excess balsam can be removed with a razor blade when the section is cold.

Very dense soils and soils in which the clay fraction is 30 percent or more montmorillonite require special handling. It is necessary to use either a dry-grinding technique or a more penetrating impregnation procedure. To dry-grind, cut the sample (without using water) to the appropriate size. Sprinkle coarse abrasive (American Optical No. 190) on a ground-glass plate and commence grinding one face of the sample by hand. Best results are obtained by using a figure "8" or counterclockwise motion. Continue grinding, using successively finer abrasive, until the surface is highly polished. From this point follow the regular mounting technique.

Aroclor 5460, a thermoplastic chlorinated diphenyl resin (Monsanto), seems to give better impregnation of these dense materials. The procedure follows. Place pieces of airdry soil material in xylene and evacuate. Then submerge the xylene-saturated soil material in molten Aroclor 5460. Hold the sample in the Aroclor at about 200° C for 1 to 2 days. Remove impregnated soil material, allow it to cool, and prepare thin sections by dry-grinding.

References

Lockwood (1950), Rogers and Kerr (1933), Reed and Mergner (1953), and Cady (1965).

Interpretation 4E1b

It is desirable to become familiar with the overall features of the section first. Many studies requiring thin sections are concerned with movement of clay or other substances and differences between horizons due to soil-forming processes and weathering. Thus it is helpful to scan all the sections from a profile or all connected with a particular problem to see what important features may be worth the most emphasis. Different kinds of illumination should be used with each magnification. Strong convergent light with crossed polarizers brings out structures in dense or weakly birefringent material that at first may appear opaque or isotropic. Structures in translucent specimens become more clearly visible if plain light is used and the condensers are stopped down. Everything should be viewed in several positions of the stage or during slow rotation with crossed polarized light.

A thin section is a two-dimensional slice through a three-dimensional body. Mineral grains and structural features are seen in one plane and the shapes seen must be extrapolated to their true shapes. A grain that appears needleshaped may be a needle or the edge of a flat plate. An elliptical pore may be an angular slice through a tube. A circular unit is probably a ball. Repeated viewing of similar features that appear to be cut at different angles with the three-dimensional appearance in mind is the best way to accustom oneself to a volume rather than a planar interpretation of shape. An observer must also keep thickness of the section in mind. A well-prepared section is 20μ to 30μ thick. Grains smaller than this are stacked up and cannot be seen as individuals, and pores much smaller than this cannot be seen clearly.

433-924 O - 72 - 4

Identification of sand and silt grains in thin sections is by standard methods given in petrography texts. The general approach is the same as for grain studies (7B1) except that refractive index can be used only roughly and that more weight is given to other optical and morphological properties. It is seldom necessary to be concerned with minerals that occur in small quantities or to attempt quantitative mineralogical analysis. If identification and mineralogical analysis is important to the problem being studied, it is best to do this work on separated size fractions and to use the thin sections mainly for information about arrangement of the components. Recognition of aggregates, concretions, secondary pseudomorphs, and weathered grains is more important in thin-section studies than in sand and silt petrography. It can be easier because interior structures are exposed. Although grains of this kind may be important in studying soil genesis, they are often destroyed or eliminated by sample-preparation procedures that separate sand, silt, and clay.

By far the greatest interest in micromorphology, in the United States at least, has centered on the arrangement of clay. Clay occurs not only in the form of aggregates but also in massive interstitial fillings, coatings, bridges, and general groundmass. Even though the particles are submicroscopic, the clay can be described and characterized and sometimes identified; at least the 1:1 and 2:1 lattice types can be distinguished. Completely random-arranged clay of less than 1μ exhibits no birefringence and appears isotropic in crossed polarized light. Seldom is all the clay in a soil random and isotropic. It develops in oriented bodies during formation or becomes oriented by pressure or translocation. If enough plate-shaped particles are together and oriented in a body large enough to see, birefringence can be observed.

The silicate clay minerals in soils, except halloysite, are platy. The a and b crystallographic axes are within the plane of the plate and the c axis is almost perpendicular to this plane. The crystals are monoclinic, but the distribution of stems along the a and b axes is so nearly the same and the c axis so nearly perpendicular to the other axes that the minerals are pseudohexagonal. The optical properties of clay as well as its crystal structure and general habit are analogous to those of the micas, which can be used as a model in thinking about and describing the properties of clays.

Since the speed of light traveling in the direction of the c axis and vibrating parallel to the a axis is almost the same as that vibrating parallel to the b axis, the refractive indices are very close. Hence, interference effects seen in crossed polarized light are small when the observer is looking along the c axis. Light vibrating parallel to the c axis travels faster than in other directions and hence the refractive index is lower. If the edge of the crystal or aggregate of crystals is viewed along the a-b plane between crossed polarizers, there are two straight extinction positions and interference colors will show in other positions. If a concentration of clay is organized so that most of the plates are parallel, the optical effects can be observed. How completely or satisfactorily they can be observed depends on the purity and continuity of the clay body and on the process that oriented it.

Kaolinite has low birefringence and refractive indices slightly higher than quartz. In the average thin section its interference colors are gray to pale yellow; in residual soils it often occurs as booklike and accordionlike aggregates of silt and sand size.

Halloysite, because of its tubular habit, should not show birefringence even though it can form oriented aggregates. It may show very faint patternless birefringence caused by impurities or refraction of light at interfaces between particles.

The 2:1 lattice minerals have high birefringence and show bright intermediate-order interference colors if the edges of the aggregates are viewed. It is seldom possible to distinguish between clay-size montmorillonite, mica, vermiculite, and chlorite in thin section. These clay minerals seldom occur pure in soils; they are usually mixed and in many soils are stained by and mixed with iron oxide and organic matter.

Residual clay has been in place since its formation by weathering or since deposition of a transported soil parent material. Local adjustment of position may have occurred, but such clay has not moved separately. It may be random, completely unoriented, and thus isotropic, but more often it shows some birefringence. In transported materials silt-size flakes and other small aggregates are common. In many residual materials clay is arranged in forms pseudomorphic after rock minerals or in crystal aggregates in definite bodies such as the vermicular or accordionlike kaolin books. Regular intact arrangement of these materials generally is diagnostic for residual material.

Clay becomes rearranged by pressure applied differentially to produce shear. Platy particles become oriented by slipping along a plane like the slickenside faces in a Vertisol or in heavy glacial till; they are also oriented inside the blocks. Root pressure, wetting and drying, mass movement, slump, and creep can produce pressure orientation.

Pressure orientation can be inferred if the faces seen on structural units are smooth and have no separate coating. Otherwise it cannot be observed in plain light. In plain light clay in the section may be homogeneous and featureless. In crossed polarized light the pattern of orientation is reticulate, consisting of bright lines showing aggregate birefringence, often intersecting at regular angles. The effect is that of a network in a plaid pattern. There may be numerous sets of these slip planes that appear in different positions as the stage is turned. Pressure-oriented clay may appear around rigid bodies like quartz grains or along root channels. It is often strongly developed on ped faces. Pressure can also orient mica flakes and any other small platy grains.

Translocated clay has several features that distinguish it from residual clay. It occurs in separate bodies, usually having distinct boundaries, and is located on present or former pore walls, channel linings, or ped faces. It is more homogeneous than matrix clay and is usually finer. It may have a different composition from the matrix, especially if it came from another horizon. It shows lamination indicating deposition in successive increments. Finally, these bodies of translocated clay show birefringence and extinction, indicating that they are oriented aggregates. If they are straight, they have parallel extinction; if curved, a dark band is present wherever the composite c axis and composite a and b axes are parallel to the vibration planes of the polarizers. These dark bands sweep through the clay aggregate when the stage is rotated.

Other substances may form pore linings and ped coatings. The more common are goethite, gibbsite, carbonate minerals, and gypsum; they can be identified by their mineralogical properties.

Amorphous coatings of organic matter with or without admixed iron and aluminum are common, especially in spodic horizons. This material is dark brown to black, isotropic or faintly birefringent, and often flecked with minute opaque grains. It occurs as the bridging and coating material in B horizons of sandy Spodosols and as a thin coating or stain on faces of pores and peds in other soils.

References

Cady (1965).

Moved-clay percentage **4E1c**

Apparatus

Diamond tile saw.
Thin-section equipment.
Point-counting eyepiece.

Reagents

Aroclor 5460 (Monsanto).
Polyester resin.
Styrene.

Procedure

Impregnate an undisturbed field sample with Aroclor (4E1b). With a diamond saw cut the clods into pieces about 3 by 1 by 1 cm. Mount about 10 pieces side by side with polyester resin (use a little styrene) to form a block. Cut this assembly to form slices 3 by 1 by 1 cm. Slice all the field sample, composite, and withdraw subsamples of 10 to 15 slices. Stack these slices, tape them together, and mount in plastic (polyester resin plus styrene). Cut a section through the stack parallel to the direction of stacking and along the longer of the two remaining axes. Mount one such section from each stack on a glass slide and prepare a thin section.

To estimate the moved-clay volume insert a point-counting eyepiece into the microscope and run a transect along each strip. Keep the transect length and the number of fields in a transect constant. Count the number of points that fall on moved clay. Divide this number by the total number of points to get an estimate of the proportion of moved clay. To convert these volume estimates to weight estimates, multiply by the ratio of the bulk density of the moved clay to the bulk density of the appropriate dry fabric. Assume that the moved clay has a bulk density of 2.00 g per cubic centimeter.

References

Grossman (1964).

Scanning electron microscopy **4E2**

Electronically reproduced images of fabric surfaces can be obtained at magnifications ranging from 50 to 30,000 diameters. Depth of focus by this technique is large compared to that by light microscope. Stereoscopic pictures can be taken to give three-dimensional viewing.

Procedure

Take a sample of fabric up to 10 mm in diameter and 2 to 3 mm thick. Coat with a thin metallic layer and insert in the instrument. The image is displayed on a cathode ray tube.

PLASTICITY INDEX 4F

The plasticity index is the difference between the upper plastic limit and the liquid limit. Details are available in ASTM method D424.

References

American Society for Testing and Materials (1970).

Liquid limit **4F1**

See ASTM method D423.

Upper plastic limit **4F2**

See ASTM method D424.

ION-EXCHANGE ANALYSES

CATION-EXCHANGE CAPACITY 5A

NH_4OAc, pH 7.0 (Büchner funnel) 5A1

Reagents

Ammonium acetate (NH_4OAc), 1*N*, pH 7.0.—Mix 68 ml ammonium hydroxide (NH_4OH), specific gravity 0.90, and 57 ml 99.5-percent acetic acid (CH_3COOH) per liter of solution desired. Cool, dilute to volume with water, and adjust to pH 7.0 with CH_3COOH or NH_4OH.—Optionally prepare from NH_4OAc reagent salt and adjust pH.

Ethanol (CH_3CH_2OH), 95-percent, U.S.P.

Nessler's reagent (optional).—Prepare according to Yuen and Pollard.

Procedure

Weigh 25 g[7] airdry <2-mm soil into a 250-ml Erlenmeyer flask and add 35 to 50 ml NH_4OAc solution. Stopper, shake the flask for several minutes, and allow to stand overnight. Transfer contents of the flask to a Büchner funnel (Coors No. 1) fitted with moist Whatman No. 42 filter paper. Filter, using gentle suction if needed. Leach with 200 ml NH_4OAc, adding small amounts at a time so that leaching requires no less than 1 hour. Transfer leachate from suction flask to volumetric flask and retain for analysis of NH_4OAc-extractable cations (methods 6N2, 6O2, 6P2, 6Q2).

Add 95-percent ethanol in small amounts to the ammonium-saturated soil remaining on the Büchner funnel until the leachate gives a negative test for ammonia with Nessler's reagent or leach with 100 ml ethanol.

References

Peech et al. (1947) and Yuen and Pollard (1952).

Direct distillation of adsorbed ammonia, Kjeldahl 5A1a

Reagents

Sodium chloride (NaCl).

Antifoam mixture.—Mix equal parts of mineral oil and n-octyl alcohol.

Sodium hydroxide (NaOH), 1*N*.

Hydrochloric acid (HCl), 0.2*N*, standardized.

Boric acid (H_3BO_3), 4-percent.

Mixed indicator.—1.250 g methyl red and 0.825 g methylene blue in 1 liter 95-percent ethanol.

Brom cresol green, 0.1-percent, aqueous solution.

[7] Some early work was done with 50-g samples.

Procedure

Transfer the soil plus filter paper from method 5A1 to a Kjeldahl flask. Add 400 ml water and about 10 g NaCl, 5 drops antifoam mixture, a gram or two of granular zinc, and 40 ml 1*N* NaOH. Connect the flask with the condenser and distill 200 ml into 50 ml 4-percent H_3BO_3 solution. Titrate the distillate to the first tinge of purple with 0.2*N* HCl, using 10 drops mixed indicator and 2 drops brom cresol green.

Calculations

$$CEC\ (\text{meq}/100\ \text{g}) = \frac{\text{ml HCl}}{\text{g sample}} \times N \text{ of acid} \times 100$$

Report on ovendry basis.

References

Peech et al. (1947).

Displacement and distillation of adsorbed ammonia, semimicro Kjeldahl 5A1b

Reagents

Sodium chloride (NaCl), acidified, 10-percent.—Dissolve 100 g NaCl, reagent-grade, ammonia-free, in 750 ml warm water; add 25 ml 2*N* hydrochloric acid (HCl) and bring to 1,000-ml volume.

Sodium hydroxide (NaOH), 1*N*.

Boric acid (H_3BO_3), 2-percent.

Sulfuric acid (H_2SO_4), 0.01*N*, standardized.

Ethanol, 95-percent.

Mixed indicator.—Dissolve 0.1 g methyl red and 0.1 g brom cresol green in 250 ml ethanol.

Procedure

Leach soil from method 5A1 with 240 ml 10-percent acidified NaCl solution, using small increments. Drain completely between each increment. Transfer the leachate to a 250-ml volumetric flask and adjust volume to mark. Pipet a suitable aliquot of the leachate into a micro-Kjeldahl distillation flask and attach to steam-distillation apparatus. Start steam distillation and slowly add 10 ml 1*N* NaOH. Catch distillate in a 250-ml Erlenmeyer flask containing 10 ml H_3BO_3 and 10 drops of mixed indicator. Distill for 5 minutes after H_3BO_3 turns green, lower receiving flask, and rinse condenser and outlet hose into receiving flask. Titrate the ammonia with 0.01*N* H_2SO_4 to a red end point, using a blank for comparison.

Calculations

$$CEC\ (\text{meq}/100\ \text{g}) = \frac{\text{ml } H_2SO_4}{\text{g sample}} \times N \text{ of acid} \times \frac{\text{ml leachate}}{\text{ml aliquot}} \times 100$$

Report on ovendry basis.

NaOAc, pH 8.2 **5A2**

Centrifuge method **5A2a**

Reagents

Sodium acetate (NaOAc), 1*N*, pH 8.2.
Ethanol, 95-percent.
Ammonium acetate (NH_4OAc), 1*N*, pH 7.0. —Add 57 ml concentrated acetic acid and 68 ml concentrated NH_4OH, specific gravity 0.90, to about 800 ml water. Cool and dilute to 1 liter and adjust to pH 7.0 by adding more NH_4OH or acetic acid.

Procedure

Weigh 5-g samples to an accuracy of 1 percent and place in centrifuge tubes. Add 33 ml NaOAc, stopper the tubes, and shake for 5 minutes. Remove stopper and centrifuge until the supernatant liquid is clear (usually 5 min). Decant the supernatant liquid as completely as possible and discard. Repeat four times, discarding the supernatant liquid each time. After the last saturation, wash the rubber stoppers and use absorbent paper to remove any acetate crystals remaining on lip of centrifuge tube. Add about 30 ml ethanol to each tube, stopper, shake for 5 minutes, remove stopper, and centrifuge until the supernatant liquid is clear. Decant and discard the supernatant liquid. Continue washing until the electrical conductivity of the supernatant liquid from the last washing is between 55 and 40 μmho per centimeter. Optionally, decrease volume by about 5 ml each washing. Replace the absorbed sodium from the sample by extracting with three 30-ml portions of NH_4OAc solution. Dilute to 100 ml and determine the sodium concentration as described in 6P2a.

Calculations

$$CEC\ (\text{meq}/100\ \text{g}) = \frac{\text{meq/l Na from curve}}{\text{g sample}} \times \text{dilution} \times 10$$

Report on ovendry basis.

References

Richards (1954).

Sum of cations **5A3**

Acidity by $BaCl_2$-triethanolamine, pH 8.2; bases by NH_4OAc, pH 7.0 **5A3a**

Procedure

Compute the cation-exchange capacity from the sum of the extractable bases (NH_4OAc extract, methods 6N2, 6O2, 6P2, 6Q2) and the extractable acidity obtained by titrating the triethanolamine (TEA) extract (6H). This value for exchange capacity is not valid in the presence of significant quantities of soluble salts or calcium carbonate.

References

Peech et al. (1947).

Sum of bases plus Al **5A3b**

Sum the extractable bases and the KCl-extractable aluminum.

KOAc, pH 7.0* **5A4**

Procedure

Proceed as in 5A1 except substitute 1*N* KOAc, pH 7.0, for NH_4OAc. Determine potassium with flame photometer.

$BaCl_2$, pH 8.2 **5A5**

Apparatus

Leaching tubes.
Flame photometer.

Reagents

Buffer solution.—Barium chloride ($BaCl_2$), 0.5*N*, and triethanolamine (TEA), 0.2*N*. Adjust to pH 8.2 with HCl. Protect from CO_2 of the air by attaching a drying tube containing soda lime (sodium calcium hydrate) to the air intake.

Replacement solution.—Barium chloride ($BaCl_2$), 0.5*N*. Add 0.4 ml buffer solution per liter and mix. Protect from CO_2 with soda-lime tube.

Magnesium nitrate ($Mg(NO_3)_2$), 1*N*.

Procedure

Transfer a 5-g sample to a leaching tube. For field-moist samples use a sample large enough to give an ovendry weight of about 5 g. Leach with 50 ml $BaCl_2$–TEA solution, controlling the leaching rate to give at least 4 hours of soil-solution contact time. Follow with 100 ml $BaCl_2$ replacement solution, controlling the leaching rate so that the soil and $BaCl_2$ solutions are in contact for a total of 20 to 24 hours. Rinse walls of leaching tube with 15 to 20 ml H_2O, collecting this washing with leachates from $BaCl_2$ solutions. Extractable acidity can be determined by using this solution (6H1a).

Place leaching tube on a clean flask and wash with methanol until free of chloride ion. For many samples 100 ml methanol is enough, but more methanol may be needed for some soils, particularly those of heavy texture and containing large amounts of hydrous oxides. Leach with 100 ml 0.001*N* $BaCl_2$ to remove methanol.

Disconnect leaching tube and flask, rinse underside of leaching tube, place over a 250-ml volumetric flask, and leach with 100 ml 1*N* $Mg(NO_3)_2$ solution. Control leaching rate to give a soil-solution contact time of 16 hours or

more. Rinse walls of leaching tube with 15 to 20 ml H_2O; collect rinse in the $Mg(NO_3)_2$ leachate. Make to volume.

Barium by flame photometry **5A5a**

Make standards in 1*N* $Mg(NO_3)_2$. Determine barium by flame photometry at 489 mμ.

Calculations

$$CEC\ (\text{meq}/100\ \text{g}) = \frac{\text{meq/l Ba from curve}}{\text{g sample}} \times \text{dilution} \times 25$$

Report on ovendry basis.

NH_4OAc, pH 7.0—leaching tube **56A**

Apparatus

Allihn leaching tubes or 50-ml plastic syringe barrels.

Reagents

Same as in 5A1.

Procedure

Prepare the Allihn tubes by placing either filter paper (Reeve Angel No. 934 AH, 3-cm fiber glass) or filter paper pulp on the fritted glass plate. If the syringe barrel is used as a leaching tube, compress the filter paper pulp in the barrel bottom with the syringe plunger. Place a Gooch perforated plate over the filter paper to permit stirring the soil without damage to the filter. (This plate is not necessary if an adequate pulp pad is used.) Place 5 or 10 g soil and a teaspoon of Celite into the tubes. (Optionally place a layer of Celite under the soil.) Add 25 ml *N* NH_4OAc; stir and leach. Add an additional 25 ml *N* NH_4OAc and let stand overnight. Stop the leaching with a pinch clamp or by stoppering the leaching tube. Add the NH_4OAc directly to the leaching tube or use a constant level device (6N3, fig. 8). A volumetric flask can be substituted for the 250-ml Erlenmeyer flask and tubing.

Make the leachate to volume if a volumetric flask is used or, if tared suction flasks are used, make to the appropriate calibrated weight for 100 ml NH_4OAc. Set aside the leachate for further analysis.

Add about 10 ml ethanol to the soil pad, stir, and leach. Leach with 100 ml ethanol and check for NH_4^+ in leachate. If NH_4^+ is present, leach with an additional 100 ml ethanol. Some soils, particularly those containing amorphous material, require as much as 400 ml ethanol to clear the ammonia from the leachate.

Direct distillation **5A6a**

Transfer soil cake to Kjeldahl flask and determine ammonia as described in 5A1a.

EXTRACTABLE BASES 5B

NH_4OAc extraction **5B1**

Procedure

Analyze the NH_4OAc leachate from method 5A1a for calcium, magnesium, sodium, and potassium (methods 6N2, 6O2, 6P2, 6Q2).

Uncorrected (extractable) **5B1a**

If a soil does not contain soluble salts, the extractable bases are presumed to equal the exchangeable bases. They are, however, reported as extractable bases.

Corrected (exchangeable) **5B1b**

If a soil contains soluble salts, estimate their amount from the saturation extract as follows. Multiply cation concentration in the saturation extract (meq/l) by the saturation percentage (divided by 1,000) to convert to milliequivalents per 100 g. Subtract this quantity from the concentration of the extracted cation. This procedure is not valid for calcium and magnesium in the presence of carbonates or for calcium in the presence of gypsum because these salts are soluble in NH_4OAc.

References

Peech et al. (1947).

KCl-triethanolamine extraction, pH 8.2* **5B2**

Reagents

Buffer solution.—Potassium chloride (KCl), 1.0*N*, and triethanolamine (TEA), 0.2*N*, pH 8.2.

Procedure

Proceed as in 5B1 except leach with 1*N* KCl buffered at pH 8.2 with triethanolamine. Determine calcium by method 6N4, magnesium by 6O4.

References

North-Central Regional Research Committee (1955).

KCl-triethanolamine extraction, pH 8.2 (revised) **5B3**

Reagents

Buffer solution.—Potassium chloride (KCl), 1.0*N*, and triethanolamine (TEA), 0.2*N*, pH 8.2.

Procedure

Weigh 10-g samples and transfer to 100-ml beakers. Add 40 ml buffer solution. Stir thoroughly at least three times over a period of not less than 1 hour. Filter the suspension and collect the leachate in a 100-ml volumetric flask.

Analyze the leachate for Ca and Mg by an appropriate procedure (6N4, 6O4).

Uncorrected (extractable) **5B3a**

If a soil does not contain soluble salts, the extractable bases are presumed to equal the exchangeable bases. They are, however, reported as extractable bases.

Corrected (exchangeable) **5B3b**

If a soil contains soluble salts, estimate their amounts from the saturation extract and correct as in 5B1b.

NH_4OAc, pH 7.0 (revised) **5B4**

Analyze the NH_4OAc leachate from method 5A6 for Ca, Mg, Na, and K (methods 6N2, 6O2, 6P2, 6Q2).

Uncorrected (extractable) **5B4a**

If a soil does not contain soluble salts, the extractable bases are presumed to equal the exchangeable bases. They are, however, reported as extractable bases.

Corrected (exchangeable) **5B4b**

If a soil contains soluble salts, estimate their am unts from the saturation extract and correct as in 5B1b.

BASE SATURATION 5C

NH_4OAc, pH 7.0 **5C1**

Divide sum of NH_4OAc-extracted bases by the exchange capacity determined by method 5A1.

NaOAc, pH 8.2 **5C2**

Divide sum of NH_4OAc-extracted bases by the exchange capacity determined by method 5A2a.

Sum of cations, TEA, pH 8.2 **5C3**

Divide sum of NH_4OAc-extracted bases by the sum of cations determined by method 5A3.

SODIUM SATURATION (EXCHANGEABLE-SODIUM PERCENTAGE) 5D

NaOAc, pH 8.2 **5D1**

Divide exchangeable sodium (meq/100 g) by the exchange capacity determined by method 5A2a.

NH_4OAc, pH 7.0 **5D2**

Divide exchangeable sodium (meq/100 g) by the exchange capacity determined by method 5A1.

SODIUM-ADSORPTION RATIO 5E

Calculate the sodium-adsorption ratio (*SAR*) by the following equation

$$SAR = \frac{[Na^+]}{\sqrt{\frac{[Ca^{++}]+[Mg^{++}]}{2}}}$$

where $[Na^+]$, $[Ca^{++}]$, and $[Mg^{++}]$ refer to the concentration of these cations expressed in milliequivalents per liter.

References

Richards (1954).

CALCIUM SATURATION (EXCHANGEABLE-CALCIUM PERCENTAGE) 5F

NH_4OAc, pH 7.0 **5F1**

Divide the NH_4OAc-extracted calcium by the exchange capacity determined by procedure 5A1 or 5A6.

CHEMICAL ANALYSES

ORGANIC CARBON 6A

Determine carbon for each horizon that may contain organic matter. Report as carbon percentage by weight of <2-mm material.

To calculate total carbon per unit area, convert these weight percentages to volume percentages. Multiply each value by the bulk density Db_m, where m is usually ⅓ bar or 30 cm, and by the thickness (inches) of that horizon. If coarse fragments are present, further multiply by *Cm* (4A). Sum the organic-matter percentages and multiply by 0.254 to convert to kilograms of carbon per square meter.

Acid dichromate digestion 6A1

$FeSO_4$ titration 6A1a

Reagents

Potassium dichromate ($K_2Cr_2O_7$), 1.00*N* (49.04 g per liter).

Ferrous sulfate, 1.0*N*.—Dissolve 280 g reagent-grade $FeSO_4 \cdot 7H_2O$ in water, add 80 ml concentrated H_2SO_4, cool, and dilute to 1 liter. Standardize this reagent each day by titrating against 10 ml *N* $K_2Cr_2O_7$ as directed.

Barium diphenylaminesulfonate indicator, 0.16-percent aqueous solution.

Orthophenanthroline-ferrous complex (optional), 0.025*M* solution of one of the phenanthroline-ferrous complex indicators.

H_2SO_4, at least 96-percent.

Phosphoric acid (H_3PO_4), 86-percent.

Procedure

Transfer 1 g (0.5 g or less if high in organic matter) soil ground to pass an 80-mesh sieve to a 500-ml Erlenmeyer flask. Add 10 ml *N* $K_2Cr_2O_7$. Add 20 ml concentrated H_2SO_4 rapidly, directing the stream into the solution. Immediately swirl vigorously or place in wrist-action shaker for 1 minute. Let the flask stand on a sheet of asbestos for about 30 minutes. Add 200 ml water and 10 ml H_3PO_4. Add 0.5 ml barium diphenylaminesulfonate just before titrating. Titrate by adding $FeSO_4$ drop by drop to a light green end point. If more than 8 ml of the available 10 ml $K_2Cr_2O_7$ are reduced, repeat the determination, using less soil. If orthophenanthroline-ferrous complex is the indicator, it is not necessary to add H_3PO_4.

Calculations

Organic carbon (pct.)

$$= \frac{\text{ml } FeSO_4 \text{ blank} - \text{ml } FeSO_4 \text{ sample}}{\text{g sample}} \times N \text{ of } FeSO_4 \times \frac{0.30}{0.77}$$

0.77 is the recovery factor proposed by Walkley (1935). Report on ovendry basis.

References

Peech et al. (1947) and Walkley (1935).

CO_2 evolution, gravimetric 6A1b

Reagents

Digestion-acid mixture.—Mix 600 ml concentrated H_2SO_4 and 400 ml 85-percent H_3PO_4.

Potassium dichromate ($K_2Cr_2O_7$), reagent grade.

Potassium iodide (KI).—Dissolve 100 g KI in 100 ml water.

Silver sulfate (Ag_2SO_4), saturated aqueous solution.

Concentrated sulfuric acid (H_2SO_4).

Other reagents.—Indicarb or Mikohbite, soda lime, 30-mesh zinc, and anhydrone (anhydrous magnesium perchlorate).

Apparatus

Figure 4.

Procedure

Place a soil sample containing 20 to 40 mg carbon (usually 0.5 to 3 g ovendry soil) in digestion flask and add 1 to 2 g $K_2Cr_2O_7$. Wash the neck of the flask with 3 ml water and connect the flask to reflux condenser. Attach the weighed Nesbitt bulb to the system and open the valve at the top. Pour 25 ml digestion-acid mixture into funnel, let it enter the flask, and close the stopcock immediately to prevent loss of CO_2. Use digestion-acid mixture to lubricate the funnel stopcock. The tip of the air-delivery tube should extend about 0.5 cm below the surface of the acid during digestion. Adjust the "carrier stream" to a flow rate of one or two bubbles per second and maintain this rate during digestion. Heat with a gas flame of sufficient intensity to bring the sample to boiling in 3 to 4 minutes. Continue gentle boiling for a total heating period of 10 minutes (avoid excessive frothing). Heating is too rapid if white fumes of SO_2 are visible above the second bulb of the reflux condenser during boiling. At the end of the digestion period remove the flame and aerate for 10 minutes at the rate of six to

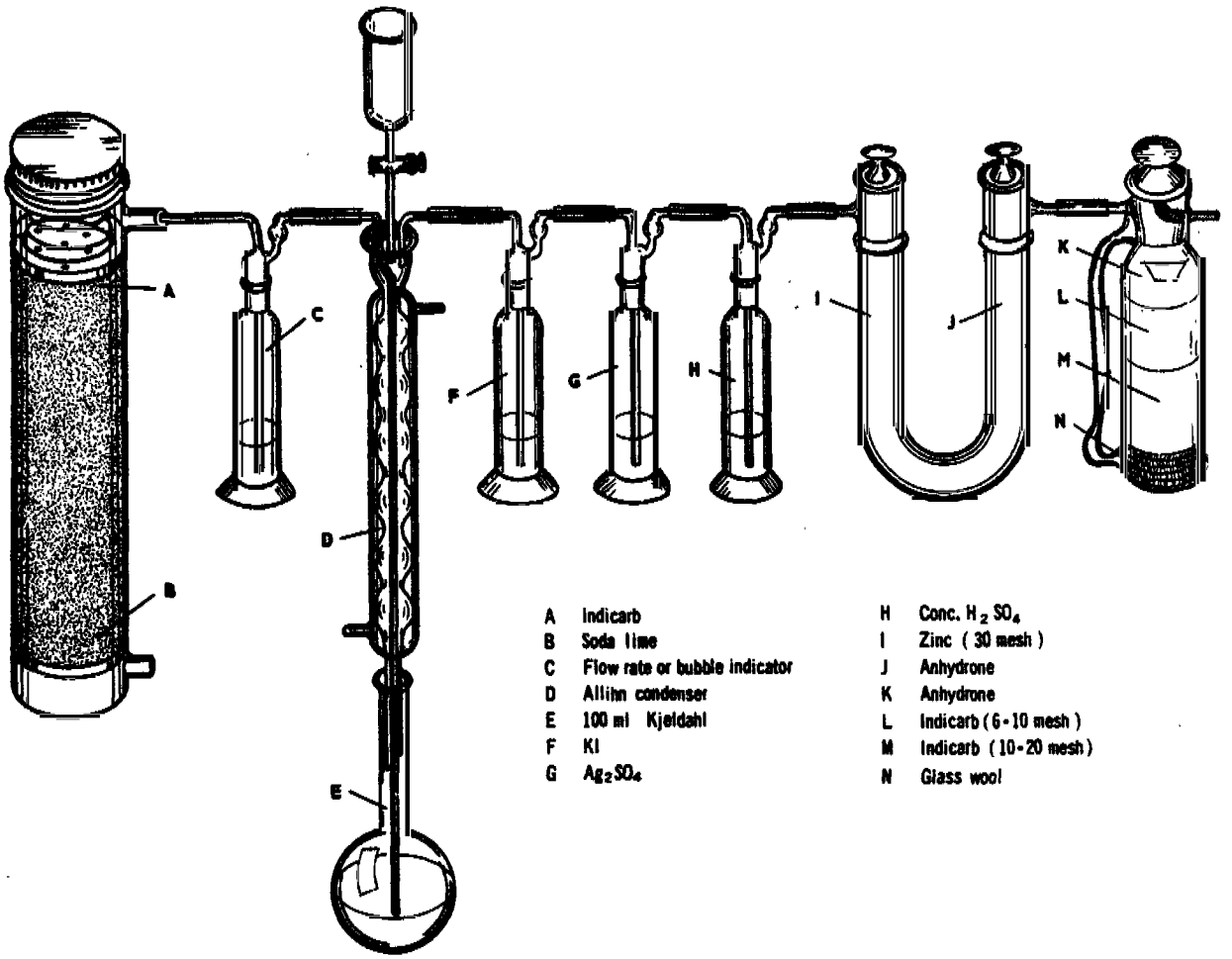

FIGURE 4.—Apparatus for organic carbon determination by wet combustion with potassium dichromate (6A1b).

eight bubbles per second. Then close the stopcock on the Nesbitt bulb, disconnect the bulb from the system, and weigh.

Calculations

$$\text{Organic carbon (pct.)} = \frac{\text{final g bulb} - \text{initial g bulb}}{\text{g sample}} \times 27.3$$

Report on ovendry basis.

References

Allison (1960).

Dry combustion **6A2**

CO_2 evolution, gravimetric I **6A2a**

Reagents

Powdered manganese oxide (MnO_2).

Apparatus

Figure 5.

Procedure

Place 0.5 to 1.5 g soil that has been ground to 80 mesh in an Alundum boat c ntaining 0.25 g powdered MnO_2. Insert the boat into the quartz tube of the multiple-unit combustion furnace shown in figure 5. Before inserting the soil, preheat the long part of the quartz tube to 900° C or more (1,000° or 1,100° C) and clear of CO_2 by passing CO_2-free oxygen through the combustion train until the weighing bottle shows a constant weight. While oxygen is passing slowly through the apparatus, heat to a temperature of 900° C or higher (15 to 30 min). Continue heating in a streaming oxygen atmosphere for 30 minutes more or until the Nesbitt absorption bulb has reached a constant weight.

Calculations

Report on ovendry basis as in 6A1a.

References

Robinson (1930).

CO_2 evolution, gravimetric II **6A2b**

Apparatus

Figure 6.

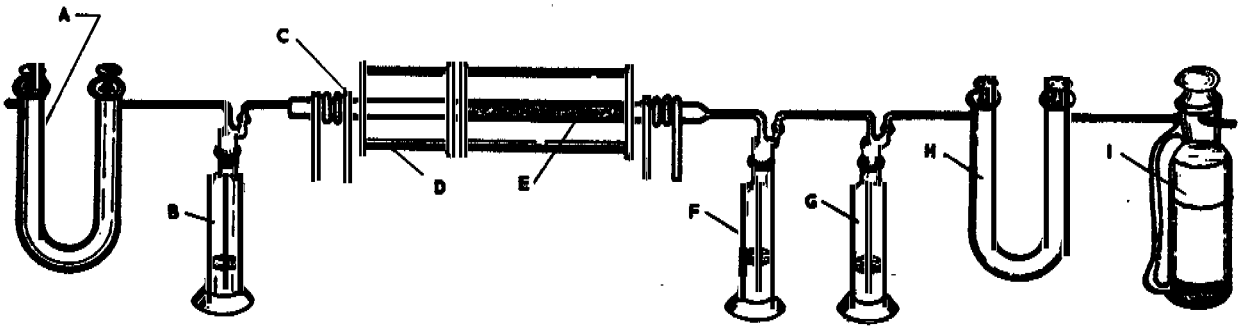

A Schwartz absorption tube containing 8-20 mesh Caroxite
B Gas washing bottle containing conc. H_2SO_4
C Cooling coils
D Combustion furnace
E Platinum and asbestos catalyst
F Gas washing bottle containing saturated Ag_2SO_4
G Gas washing bottle containing conc. H_2SO_4
H Schwartz absorption tube containing granular zinc in left arm and anhydrous magnesium perchlorate in right arm
I Nesbit absorption bottle containing anhydrous magnesium perchlorate in top layers, 8–20 mesh Caroxite in middle layer, and glass wool in bottom layer

FIGURE 5.—Apparatus for organic carbon determination by dry combustion, carbon dioxide evolution I (6A2a).

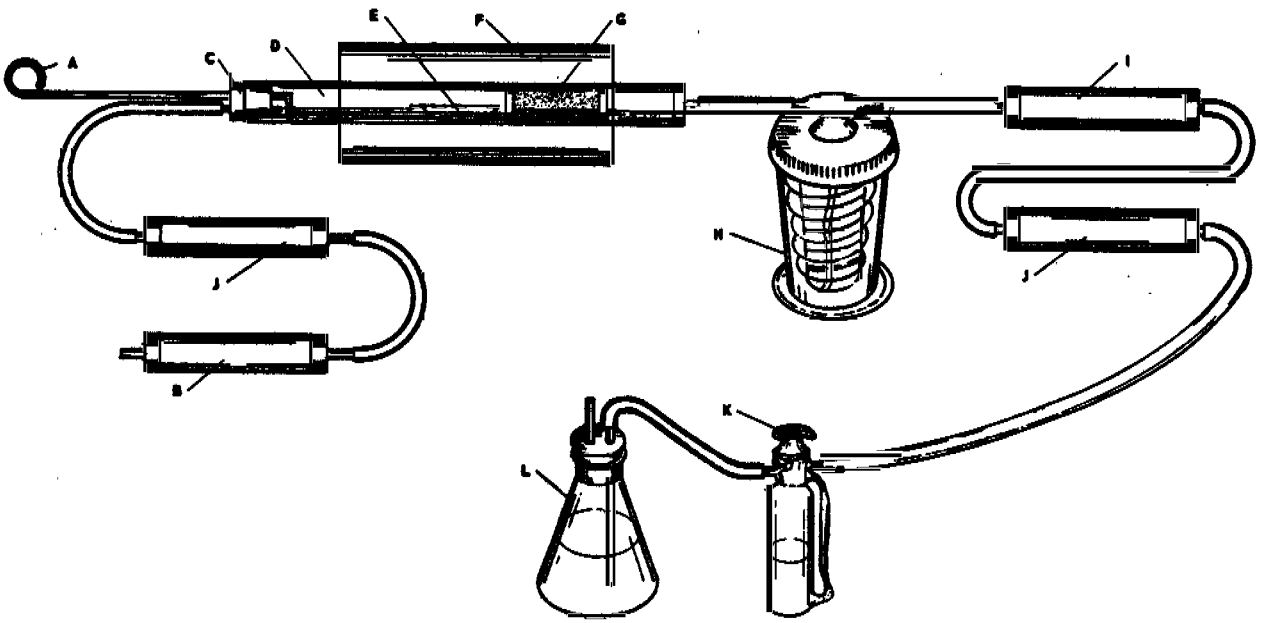

A Push rod
B Drying tube containing Indicarb
C Rubber stopper
D Alundum combustion tube
E Combustion boat
F Combustion furnace
G Cupric oxide wire
H Milligan gas washing bottle containing concentrated H_2SO_4
I Tube containing ZnO_2
J Tube containing Anhydrone
K Nesbitt absorption bulb containing Anhydrone and Indicarb
L Bubble counter containing H_2SO_4

FIGURE 6.—Apparatus used for organic carbon determination by dry combustion, carbon dioxide evolution II (6A2b).

Procedure

Heat tube to approximately 950° C. Sweep with oxygen until weight of Nesbitt bulb is constant. Remove rubber stopper in the oxygen-inlet end of the tube and insert the boat containing 0.5 to 1.5 g soil. Reinsert the stopper and use the push rod to move the boat into the hot zone. Heat for 10 minutes, remove bulb, and record weight gain. Remove boat and repeat process with fresh sample, using the same Nesbitt bulb.

Calculations

Report on ovendry basis as in 6A1a.

References

Robinson (1930) and Post.[8]

Peroxide digestion* **6A3**

Gravimetric weight loss **6A3a**

Reagents

Hydrogen peroxide (H_2O_2), 6-percent.

Procedure

Digest soil for several hours in a covered beaker with 6-percent H_2O_2. Remove soluble material by washing three to five times with a Pasteur-Chamberlain clay filter, "F" fineness. Dry the beaker and soil, and weigh.

Calculations

Organic matter (pct.)

$$= \frac{\text{g loss on heating} + \text{g dry matter in soln}}{\text{g sample}} \times 100$$

Note that organic matter differs from organic carbon (see 6A1a).

References

North-Central Regional Research Committee on soils (1955).

NITROGEN 6B

Kjeldahl digestion **6B1**

Reagents

Concentrated sulfuric acid (H_2SO_4).

Salt mixture.—Potassium sulfate (K_2SO_4) or anhydrous sodium sulfate (Na_2SO_4), ferrous sulfate ($FeSO_4$), and copper sulfate ($CuSO_4$), ratio 10:1:½; or No. 1 Kel-Pak, 9.9 g K_2SO_4, 0.41 g mercuric oxide (HgO), 0.08 g $CuSO_4$.

Sodium hydroxide (NaOH), about 45-percent.—Add Na_2S 1:25 if mercury salt mixture used.

Antifoam mixture.—Equal parts n-octyl alcohol and mineral oil.

Mossy zinc or DeVardas alloy.

Procedure

Digest 10 g soil in an 800-ml Kjeldahl flask with 30 ml H_2SO_4 and about 10 g salt mixture. Continue digestion for 1 hour after mixture is colorless or nearly so.

References

Association of Official Agricultural Chemists (1945).

Ammonia distillation **6B1a**

Reagents

Mixed indicator.—Methyl red, 0.125-percent, and methylene blue, 0.0825-percent, in 95-percent ethanol.

Methyl red (optional), 0.25-percent.

Brom cresol green, 0.1-percent aqueous solution.

Boric acid (H_3BO_3), 4-percent.

HCl, standardized, 0.1*N* or 0.05*N*.

Procedure

Cool digestion flask (6B1) and dilute contents with about 400 ml water. Add 2 to 3 g mossy zinc, 5 drops antifoam mixture, and 70 ml concentrated NaOH solution. Connect flask to condenser and distill ammonia into 25 or 50 ml H_3BO_3 solution. Titrate with standard HCl to purple end point, using 10 drops mixed indicator and 2 drops brom cresol green or 3 drops brom cresol green and 1 drop methyl red.

Calculations

$$\text{N (pct.)} = \frac{\text{ml HCl sample} - \text{ml HCl blank}}{\text{g sample}} \times N \text{ of HCl} \times 1.4$$

Report on ovendry basis.

Semimicro Kjeldahl **6B2**

Apparatus

Aminco-Koegel semimicro rotary digestion rack and steam-distillation apparatus.

Reagents

Concentrated sulfuric acid (H_2SO_4).

H_2SO_4, 0.01*N*, standardized.

Sodium hydroxide (NaOH), 50-percent.

Boric acid (H_3BO_3), 2-percent.

Mixed indicator.—Mix 0.1 g methyl red and 0.1 g brom cresol green and dissolve in 250 ml ethanol.

Salt mixture.—Mix 790 g potassium sulfate (K_2SO_4), 100 g ferrous sulfate ($FeSO_4$), 100 g copper sulfate ($CuSO_4$), and 10 g selenium metal.

Procedure

Using an analytical balance, weigh on a cigarette paper either 0.500 or 1.000 g ovendry soil that has been ground to about 0.2 mm. Roll soil in cigarette paper and drop into a 100-ml digestion-distillation flask. Add 2 g salt mixture, 1 ml water, and 5 ml concentrated H_2SO_4. Swirl vigorously and digest, rotating the flask

[8] Post, G. J. A study of three methods for determination of organic carbon in Ohio soils of several great soil groups and the profile distribution of carbon-nitrogen ratios. M.Sc. thesis, The Ohio State University, 34 pp. 1956.

frequently until fumes are emitted. Continue digestion for at least 1 hour after mixture becomes white. Cool to room temperature and add 15 ml water. Shake until the contents of the flask are thoroughly mixed.

Ammonia distillation **6B2a**

Procedure

Measure 10 ml 2-percent H_3BO_3 with an automatic pipet into a 125-ml flask and add 0.5 ml mixed indicator. Place this flask under delivery tube. Connect digestion-distillation flask containing soil digested according to method 6B2 to the distillation unit by the ground-glass connection. Start steam passing through the system and slowly add 15 ml 50-percent NaOH. Distill for 12 minutes, add 0.5 ml more mixed indicator, and titrate the absorbed ammonia with $0.01N$ H_2SO_4.

Calculations

$$\text{N (pct.)} = \frac{\text{ml } H_2SO_4}{\text{g sample}} \times N \text{ of } H_2SO_4 \times 1.4$$

Report on ovendry basis.

IRON 6C

Dithionite extraction* 6C1

Reagents

Sodium dithionite powder ($Na_2S_2O_4$).
Hydrochloric acid (HCl), 10-percent.

Apparatus

8-oz Pyrex nursing bottles or 250-ml flat-bottomed centrifuge bottles.

Procedure

Place 4 g soil, ground to 80 mesh, in a nursing or centrifuge bottle. Add 4 g $Na_2S_2O_4$ and 75 ml water. Stopper and shake overnight or for 16 hours. Then adjust the pH to 3.5 to 4.0, if necessary, with 10-percent HCl. Let stand for no less than 1 hour, stirring four or five times. Transfer the suspension to a graduated cylinder, dilute to 200 ml with water, and mix. Centrifuge or filter a part of the suspension and transfer 50 ml of the clear solution to a 250-ml beaker.

References

Kilmer (1960).

Dichromate titration* **6C1a**

Reagents

Hydrogen peroxide (H_2O_2), 35-percent.
Ammonium hydroxide (NH_4OH), 1:1.
Hydrochloric acid (HCl), 1:1.
Stannous chloride ($SnCl_2$).—Dissolve 1 g $SnCl_2$ in 2 to 4 ml concentrated HCl and dilute to 50 ml with water; prepare fresh each time.
Mercuric chloride ($HgCl_2$), saturated aqueous solution.
Phosphoric acid (H_3PO_4), 85-percent.
Potassium dichromate ($K_2Cr_2O_7$), $0.100N$, standard.
Barium diphenylaminesulfonate, 0.16-percent aqueous solution.

Procedure

Add 10 to 15 ml H_2O_2 (6C1) to the solution to destroy any excess reducing agent. Cover the beaker with a watchglass and warm on a hot plate until the reaction starts. Set the solution aside until the reaction subsides and then boil for 10 to 15 minutes. Add a slight excess of 1:1 NH_4OH and boil the solution for 15 to 20 minutes to insure complete removal of H_2O_2. Dissolve $Fe(OH)_3$ by adding 1:1 HCl through the lip of the beaker. Usually 10 to 15 ml are enough. Heat the solution to 90° C and reduce by adding $SnCl_2$ by drops, stirring until the yellow color just disappears. Add three to four drops more. Cool the solution to room temperature and add 15 ml $HgCl_2$ solution all at once. A light silky precipitate of Hg_2Cl_2 forms if the proper amount of $SnCl_2$ has been added. Dilute the solution to 100 to 150 ml and add 5 ml H_3PO_4. Add 10 drops of barium diphenylaminesulfonate and titrate the solution with standard $K_2Cr_2O_7$ to a violet-blue end point.

Calculations

$$\text{Fe (pct.)} = \frac{\text{ml } K_2Cr_2O_7}{\text{g sample}} \times N \text{ of } K_2Cr_2O_7 \times \frac{\text{ml extract}}{\text{ml aliquot}} \times 5.58$$

$$Fe_2O_3\text{(pct.)} = \text{pct. Fe} \times 1.43$$

Report on ovendry basis.

EDTA titration* **6C1b**

Reagents

Hydrogen peroxide (H_2O_2), 35-percent.
Ammonium persulfate ($(NH_4)_2S_2O_8$).
Salicylic acid, 1-percent in 95-percent ethanol.
EDTA, standardized as g iron per ml EDTA.
Prepare EDTA as described in 6N1a.
Iron standard, 0.500 g iron per liter.

Procedure

Pipet a 5- to 25-ml aliquot from the centrifuge tube of procedure 6C1 into a 250-ml beaker. Add 50 ml water to the beaker. Then add by drops 5 ml H_2O_2 and digest over low heat until bubbling from the decomposing H_2O_2 ceases. Remove immediately to avoid precipitation of Fe_2O_3 in samples high in iron. Caution: Add H_2O_2 slowly to prevent liberation of elemental sulfur from any remaining $Na_2S_2O_4$. Keep the volume in the beaker to about 50 ml during the digestion by adding water if necessary. Remove from heat and cool. Adjust the pH between 2.0 and 3.0 with a pH meter, using either concentrated acetic acid or a 20-percent NaOAc solution. Add a few milligrams $(NH_4)_2S_2O_8$ to the solution to insure total

oxidation of iron. Then add 1 ml indicator (1-percent salicylic acid) and titrate with 0.02*N* EDTA to a pale yellow or colorless end point.

Calculations

$$\text{Fe (pct.)} = \frac{\text{ml EDTA}}{\text{g sample}} \times V \times \frac{\text{ml extract}}{\text{ml aliquot}} \times 100$$

$$Fe_2O_3 \text{ (pct.)} = \text{pct. Fe} \times 1.43$$

where

V is the titer of EDTA in g Fe/ml EDTA

Report on ovendry basis.

References

Cheng, Bray, and Kurtz (1953).

Dithionite-citrate extraction **6C2**

Reagents

Sodium dithionite ($Na_2S_2O_4$).
Sodium citrate.

Procedure

Weigh 1 to 4 g 80-mesh soil (approximately 0.2 g free-iron maximum) into an 8-oz nursing bottle. Add 2 g sodium dithionite and 20 to 25 g sodium citrate. Add water to 4 oz and shake overnight in a reciprocating shaker.

Orthophenanthroline colorimetry **6C2a**

Apparatus

Seligson pipet, 0.1-ml.

Reagents

Orthophenanthroline, 0.25-percent.
Iron solution, 1,000 mg per liter, standard.
Sodium dithionite powder ($Na_2S_2O_4$).
Sodium citrate crystals.
Superfloc flocculating agent, 0.2-percent, in water.

Procedure

Add 5 drops Superfloc solution to the dithionite-treated soil suspension (6C2) and make to 8 oz. Shake vigorously for about 15 seconds and allow to settle. Pipet a 0.1-ml aliquot with a Seligson pipet into a 25-ml volumetric flask. Add water to about 10 ml. Using a small scoop, tap a pinch of dithionite and a pinch of sodium citrate into the flask. Add 0.5 ml 0.25-percent orthophenanthrolin and make to volume. Shake and read in a colorimeter at 508 mμ after 1 hour. To prepare the standards, pipet 5-, 10-, 25-, 50-, 100-, 150-, and 200-ml aliquots of standard iron solution (1,000 mg/l) into 8-oz shaking bottles and make to 8 oz after adding reagents as in 6C2. Transfer 0.1-ml aliquots to 25-ml volumetrics and develop color by the above procedure.

Plot the standard curve as milligrams iron per 8-oz bottle against percentage transmission.

Calculations

$$\text{Fe (pct.)} = \frac{\text{mg Fe in bottle}}{\text{g sample}} \times 10^{-1}$$

$$Fe_2O_3 \text{ (pct.)} = \text{pct. Fe} \times 1.43$$

Report on ovendry basis.

References

Holmgren (1967).

Atomic absorption **6C2b**

Apparatus

Dilutor or Seligson pipet, 0.5 ml.
Perkin-Elmer Model 290 atomic absorption spectrophotometer.

Reagents

Iron solution 1,000 mg per liter, standard (optionally 2,000 mg/l).
Superfloc flocculating agent, 0.2 percent in water. Shake intermittently for several days to bring into solution.

Procedure

Bring the volume of the dithionite-treated soil suspension to 8 oz with water. Add 5 drops Superfloc, stopper, and shake vigorously for 15 seconds. Allow to settle for 1 hour. Or if a pinch of dry Superfloc is added, allow to settle 1 to 3 hours. Dilute the supernatant tenfold to fortyfold with the dilutor or the Seligson pipet.

Determine the flame absorption of the sample at 2,483 Å and compare with the absorption of standard solutions as prepared in 6C2a.

Calculations

$$\text{Fe (pct.)} = \frac{\text{mg Fe in bottle}}{\text{g sample}} \times \frac{\text{dilution}}{10}$$

$$Fe_2O_3 \text{ (pct.)} = \text{pct. Fe} \times 1.43$$

Report on ovendry basis.

Dithionite-citrate-bicarbonate extraction **6C3**

Reagents

Sodium bicarbonate ($NaHCO_3$), 1*M*.
Sodium citrate, 0.3*M*.
Sodium dithionite ($Na_2S_2O_4$).
Sodium chloride (NaCl), saturated solution.
Acetone.

Procedure

Weigh 4 g soil (1 g clay) into a 100-ml centrifuge tube. Add 40 ml 0.3*M* Na-citrate and 5 ml 1*M* $NaHCO_3$. Bring temperature to 80° C in water bath. Add 1 g solid $Na_2S_2O_4$, stir constantly for 1 minute and occasionally for 15 minutes. Add 10 ml NaCl solution and 10 ml acetone to promote flocculation. Mix, warm in water bath, and centrifuge 5 minutes at 1,600 to 2,200 rpm. Decant clear supernatant into 500-ml volumetric flask and make to volume.

References

Mehra and Jackson (1960).

Potassium thiocyanate colorimetry **6C3a**

Apparatus

Colorimeter.

Reagents

Hydrochloric acid (HCl), 6*N*.
Potassium thiocyanate (KSCN), 20-percent.
Hydrogen peroxide (H_2O_2), 30-percent.

Procedure

Transfer suitable aliquot (0.5 to 3 ppm iron in final solution) to 50 ml-volumetric flask. Add water to 35 ml, 1 drop H_2O_2, 5 ml HCl, and 5 ml KSCN solution. Make to volume and read at 490 mμ in colorimeter.

Calculations

$$\text{Fe (pct.)} = \frac{\text{mg/Fe from curve}}{\text{g sample}} \times \frac{\text{ml extract}}{\text{ml aliquot}} \times 0.005$$

$$\text{Fe}_2\text{O}_3\text{(pct.)} = \text{Fe (pct.)} \times 1.43$$

Report on overdry basis.

References

Jackson (1958).

Pyrophosphate-dithionite extraction **6C4**

Reagents

Pyrophosphate solution.—Dissolve 89.2 g $Na_4P_2O_7 \cdot 10H_2O$ in 800 to 900 ml water. Adjust the pH of this solution to 8.0 by adding hydrogen-saturated exchange resin. Decant or filter, wash the resin, and dilute the solution to 1,000 ml to make 0.2*M* $Na_4P_2O_7$.

Sodium dithionite ($Na_2S_2O_4$).

Digestion acid.—10 parts concentrated HNO_3, 4 parts concentrated H_2SO_4, and 4 parts concentrated $HClO_4$.

Procedure

Mix 80 ml pyrophosphate solution and 2.0 g solid sodium dithionite in a beaker and add this solution to 4 g soil in a centrifuge tube (pH 8.0 pyrophosphate solution and dithionite combined in this ratio result in a solution having a pH of about 7.3). Continue the extraction for 30 minutes at 50° C, shaking the suspension in the tube every 5 minutes. Centrifuge the suspension 5 to 10 minutes at 2,000 rpm. Dilute the extract to 100 ml (solution A).

Immediately transfer 5 ml solution A to a beaker. Add 1 to 2 ml digestion acid and heat on a hot plate until almost dry to destroy the organic and hydrolyze pyrophosphate to orthophosphate. Allow to cool, dissolve the salts in HCl, and dilute to 100 ml (solution B). Determine iron and aluminum in solution B by appropriate methods, such as 6C3a and 6G1a.

References

Franzmeier, Hajek, and Simonson (1965).

Sodium pyrophosphate extraction **6C5**

Reagents

Sodium pyrophosphate ($Na_4P_2O_7$), 0.1*M*.
Superfloc solution, 0.4 percent.

Procedure

Place 2 g soil into 250-ml centrifuge bottle (polypropylene). Add 200 ml 0.1*M* $Na_4P_2O_7$, cap, and shake overnight. Add 5 to 10 drops 0.4-percent Superfloc, shake, and centrifuge at 2,000 rpm (Int. No. II centrifuge). Transfer the supernatant liquid to a plastic or glass container and reserve for Fe and Al analyses.

The supernatant liquid must be clear in reflected light. If fine colloids are visible, repeat the procedures. If fine colloids are still present, spin the suspension in a super centrifuge until the supernatant liquid is clear. Foam rubber can be used in the centrifuge cups as a cushion for the 250-ml flat-bottom plastic bottles.

References

Bascomb (1968).

Atomic absorption **6C5a**

Apparatus

Atomic absorption spectrophotometer.

Reagents

Standard Fe solution, 0 to 50 ppm.

Procedure

Establish standard curve and match readings from extract to curve readings. Dilute where necessary.

Calculations

$$\text{Fe (pct.)} = \text{ppm Fe} \times \frac{\text{ml extract}}{\text{g soil}} \times \frac{1}{10{,}000} \times \text{dilution}$$

Report on ovendry basis.

Ammonium oxalate extraction **6C6**

Reagents

Ammonium oxalate $(NH_4)_2C_2O_4$ 0.2*M*, pH 3.0.
Adjust the pH of 0.2*M* $(NH_4)_2C_2O_4$ to 3.0 with 0.2*M* oxalic acid ($H_2C_2O_4$).
Superfloc solution, 0.4 percent.

Procedure

Place 2 g soil into 250-ml centrifuge bottle (polypropylene). Add 200 ml 0.2*M* $(NH_4)_2C_2O_4$, cap, and shake immediately in the dark for 4 hours. Add 5 to 10 drops 0.4-percent Superfloc, shake, and centrifuge at 2,000 rpm (Int. No. II centrifuge). Transfer the supernatant liquid to a plastic or glass container. Store in the dark and reserve for Fe and Al analyses.

The supernatant liquid must be clear in reflected light. If fine colloids are visible repeat the procedure. If fine colloids are still present, spin the suspension in a supercentrifuge until the supernatant liquid is clear.

References

McKeague and Day (1965).

Atomic Absorption **6C6a**

Proceed as in 6C5a except use extract from 6C6.

MANGANESE 6D

Dithionite extraction 6D1

Extract 4.00 g soil as described in 6C1.

Permanganate colorimetry **6D1a**

Reagents

Concentrated nitric acid (HNO_3).

Hydrogen peroxide (H_2O_2), 30-percent.

Phosphoric acid (H_3PO_4), 85-percent.

Sodium para periodate ($Na_3H_2IO_6$) or sodium meta periodate ($NaIO_4$).

Purified water diluent.—Add 100 ml 80-percent H_3PO_4 and 1 g $Na_3H_2IO_6$ to 1 liter water (Mn-free); heat to boiling and digest for 1 hour; stopper with foil-covered stopper. About 85 ml of this diluent is needed for each sample.

$KMnO_4$, standard.

Procedure

Take a 10- to 25-ml aliquot from the dithionite extract and place in a 150-ml beaker. Add 5 ml 30-percent H_2O_2, digest on hot plate, and evaporate until dry. Cool beaker and contents and add 3 ml concentrated HNO_3 and 2 ml 30-percent H_2O_2. Digest on hot plate for 30 minutes, using a close-fitting cover glass, then raise cover glass, and evaporate until dry. Take up residue with 10 ml 85-percent H_3PO_4, heat to boiling, remove, and cool to about 50° C. Dilute with 10 ml water and add 0.2 g $Na_3H_2IO_6$. Cover beaker and heat to boiling. Cool to 50° C and add 62 ml purified water diluent and 0.1 g $Na_3H_2IO_6$. Digest at 90° C for 40 minutes or until no further color develops. Transfer the hot solution to a 100-ml volumetric flask, using purified water diluent to rinse the beaker. Cool, make up to volume with the diluent, stopper, and shake. Determine precentage transmittance with a photoelectric colorimeter at 540 mμ. Interpolate concentration from a standard absorbance concentration.

Calculations

$$\text{Mn (pct.)} = \frac{\text{meq/l } MnO_4^-}{\text{g sample}} \times \frac{\text{ml extract}}{\text{ml aliquot}} \times 54.9$$

$$\text{MnO (pct.)} = \text{pct. Mn} \times 1.291$$

Report on ovendry basis.

References

Jackson (1958).

CALCIUM CARBONATE 6E

HCl treatment 6E1

Gas volumetric (semiquantitative)* **6E1a**

This procedure uses a simple leveling device to measure the volume of gas released when the soil is treated with HCl. It has an inherent error caused by the solubility of CO_2 in the HCl solution. Data on file at the laboratory at Lincoln, Nebr., indicate that the results are about 10 percent (8 to 12 percent) low for $CaCO_3$ equivalents ranging from 40 percent to 6 percent (1-g basis). For 1-percent equivalents the values are about 20 percent low and for less than 1 percent, the values have doubtful significance.

References

Association of Official Agricultural Chemists (1945).

Manometric **6E1b**

Apparatus

Wide-mouth pill bottles, 3-oz, with bakelite cap; drill ⅛-inch hole in cap.

Rubber gasket cut to fit mouth of pill bottle.

Mercury manometer and 24- or 25-gauge hypodermic needle fastened to manometer tube.

Plastic vial, 5-ml capacity.

Reagents

Hydrochloric acid (HCl), 6*N*.

Procedure

Place 2 g soil ground to 80 mesh in pill bottle and add 5 ml water. Place 5 ml HCl in plastic vial and set in pill bottle. Put gasket in place with glycerin seal and tighten lid. Tip over HCl and allow to react for 15 to 30 minutes. Try to keep liquid from touching gasket. Check for leaks by immersing bottle in water. If none evident, insert hypodermic needle through the gasket and read manometer. Compare reading with those for standards prepared by adding known amounts of $CaCO_3$ to carbonate-free soil. Vary sample weight according to $CaCO_3$ content as follows: For <25 percent $CaCO_3$, use 2 g soil; for 25 to 50 percent $CaCO_3$, 1 g soil; and for >50 percent $CaCO_3$, 0.5 g soil.

If the manometer reading is not steady at end of reaction time, dolomite is suspected; allow reaction to continue until no change is noted.

References

Williams (1948).

Gravimetric (weight loss) 6E1c

Apparatus

Figure 7.

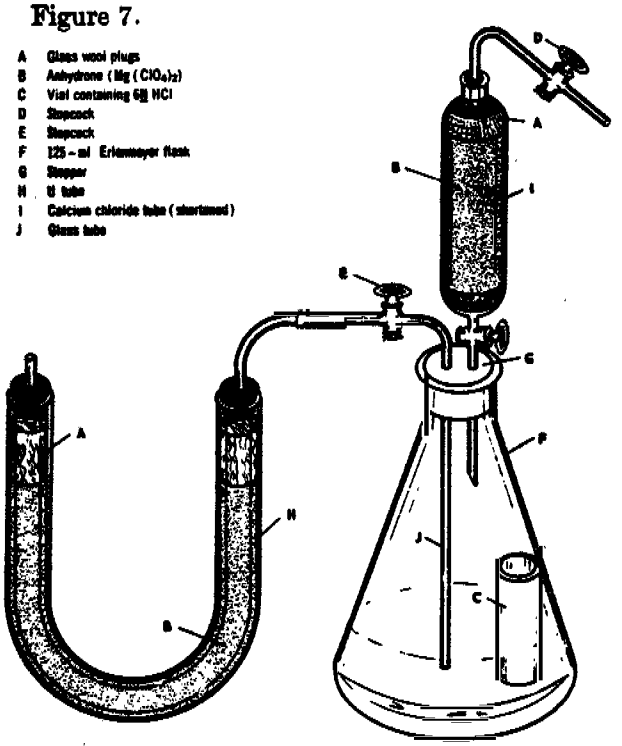

FIGURE 7.—Apparatus used for calcium carbonate determination by weight loss (6E1c).

Reagents

Hydrochloric acid (HCl), 6*N*.
Anhydrone ($Mg(ClO_4)_2$).

Procedure

Assemble apparatus as shown in figure 7. Place a sample of soil containing less than 1 g $CaCO_3$ equivalent in a 125-ml Erlenmeyer flask. Wash down the sides of the flask with 10 ml water. Place 7 ml 6*N* HCl into vial C and then place the vial upright in the flask without spilling any acid.

Moisten stopper G with glycerin, sprinkle with a small amount of 180-mesh abrasive to overcome slipperiness, and place the apparatus with stopcocks D and E, tubes I and J, attached firmly in position in the flask. Close stopcocks D and E. Place the apparatus beside the balance. Wait 30 minutes before weighing to allow temperature of the apparatus to equilibrate with temperature of air in the balance. Do all weighing with stopcock D open since a change in temperature of the flask with the stopcock closed results in a change in weight of the apparatus. Use tongs to place apparatus on the weighing pan, open stopcock D, weigh to 0.1 mg, and then immediately close stopcock D. Check the weight 10 minutes later to be certain that the weight of the flask has stabilized. Open stopcock D and then shake apparatus to upset the vial, allowing the acid to react with the carbonates. After 10 minutes, attach the rubber tube from the airdrying vessel to stopcock E. Open stopcock E and apply suction at stopcock D to give 5 to 10 bubbles per second at the base of tube J to sweep out CO_2. Shake the flask after 10 minutes and again after 20 minutes. After 30-minutes sweeping time, stop the suction and close stopcocks D and E. Return apparatus to the balance. Delay weighing for 1 hour to allow the heat generated by absorption of water by the anhydrone to be dissipated. Weigh apparatus with stopcock D open. Check the weight after 10 minutes.

Calculations

Carbonate as $CaCO_3$ (pct.)

$$= \frac{\text{initial g flask} - \text{final g flask}}{\text{g sample}} \times 228$$

Report on ovendry basis.

References

Erickson et al. (1947).

Gravimetric (weight gain) 6E1d

Proceed as in 6E1c except add additional trap containing CO_2-absorbing Ascarite to end of gas train. Weigh Ascarite bulb before and after CO_2 evolution. Weight gain equals the CO_2 evolved from the sample. Better results are obtained if the Ascarite is size-graded so that CO_2 passes through the coarser material first. Indicarb can be used in place of Ascarite.

Titrimetric 6E1

Reagents

Hydrochloric acid (HCl), 0.5*N*, standardized.
Sodium hydroxide (NaOH), 0.25*N*, standardized.
Phenolphthalein, 1 percent in 60-percent ethanol.

Procedure

Place 5 to 25 g soil in a 150-ml beaker, add exactly 50 ml HCl, cover with a watchglass, and boil gently for 5 minutes. Cool, filter, and wash all the acid from the soil with water. Determine the amount of unused acid by adding 2 drops of phenolphthalein and back-titrating with NaOH.

Calculations

Carbonate as $CaCO_3$ (pct.)

$$= \frac{50 \times N \text{ of HCl} - \text{ml NaOH} \times N \text{ of NaOH}}{\text{g sample}} \times 5$$

Report on ovendry basis.

References

Richards (1954).

Warburg method **6E1f**

Apparatus

Warburg manometer, mercury filled.

Warburg reaction vessel, 15-ml capacity, with vented stopper for sidearm.

Constant temperature bath.

Reagents

HCl, 1:1.

Na_2CO_3 solution for standard curve.—Dissolve 1.06 g Na_2CO_3 in water and make to 1 liter. Solution contains 1.06 mg Na_2CO_3 per ml or the equivalent of 1 mg $CaCO_3$ per ml. Obtain standard curve by measuring CO_2 pressure from 1, 2, 4, 6, 8, and 10 ml Na_2CO_3 solution.

Procedure

Weigh 100 mg sample of finely ground soil and transfer to Warburg reaction vessel. Be careful not to get any sample in center well. Pipet 1 ml water into vessel and mix well with sample. Pipet 1 ml 1:1 HCl into sidearm, insert greased stopper, and leave in vent-open position. Attach reaction vessel to manometer and fasten with rubber bands or spring supports. Place reaction vessel in constant temperature bath at 25° C for 5 to 10 minutes to bring flask contents to temperature of water bath.

Remove flask from bath, close stopper vent, and fasten with rubber bands or springs. Tilt flask to allow acid to flow from sidearm into reaction vessel, mix contents, and return vessel to water bath. Let stand for at least 30 minutes before reading manometer. Use the standard curve to convert the difference between the two manometer arm readings (mm), to milligrams $CaCO_3$.

Gently tap the manometer holder occasionally to prevent low readings caused by mercury adhering to manometer walls.

Sensitive qualitative method **6E2**

Visual, gas bubbles **6E2a**

Add few drops 6*N* H_2SO_4 to soil and observe under binocular microscope. Evolution of gas bubbles indicates the presence of $CaCO_3$.

H_2SO_4 treatment **6E3**

Gravametric (weight gain) **6E3a**

Reagents

Sulfuric acid (H_2SO_4).

Dissolve 57 ml concentrated H_2SO_4 and 92 g of $FeSO_4 \cdot 7H_2O$ in 600 ml water, cool, and dilute to 1,000 ml. This solution is approximately 2*N* in acidity and contains 5-percent $FeSO_4$ as antioxidant. Keep well stoppered.

Apparatus

Figure 4, procedure 6A1b.

Procedure

Place a 1- to 5-g sample of ovendry soil in the digestion flask E and connect condenser D. Weigh the Nesbitt bulb, attach to the system, and adjust the carrier stream to a flow rate of 1 or 2 bubbles per second. Pour 25 ml of the acid solution into the funnel and let it enter the digestion flask E. Close the stopcock immediately. Apply heat slowly and bring contents of flask to a boil in about 4 minutes. Continue gentle boiling for exactly 3 minutes more for a total heating period of 7 minutes. Remove the flame, adjust the carrier stream to 6 or 8 bubbles per second, and continue aerating for 10 minutes. Disconnect the Nesbitt bulb and weigh.

Calculations

Carbonate as $CaCO_3$ (pct.)

$$= \frac{\text{final g bulb} - \text{initial g bulb}}{\text{g sample}} \times 227$$

Report on ovendry basis.

References

Allison (1960).

GYPSUM **6F**

Water extract **6F1**

Precipitation in acetone **6F1a**

Reagents

Acetone (CH_3COCH_3).

Procedure

Qualitative.—Pour approximately 5 ml saturation extract into a 15-ml conical centrifuge tube. Add about 5 ml acetone and invert the tube several times to mix the contents. Let stand for 30 minutes in a test-tube rack; run quantitatively all samples in which a precipitate forms, indicating gypsum in the soil.

Quantitative.—Weigh 20 g airdry soil into an 8-oz nursing bottle and add 100 ml water (1:5 ratio). If gypsum content is more than 10 meq per 100 g soil (Solu-bridge reading >0.90), repeat, using a 1:10 or greater dilution. Stopper the bottle and shake in a reciprocating mechanical shaker for 30 minutes. Filter the suspension on folded No. 12 Whatman 18.5-cm filter paper, using a 90-mm funnel. The first few milliliters of filtrate are usually cloudy and should be caught in a waste beaker and discarded. Pipet a 5-ml (or 20-ml) aliquot into a 15-ml (or 50-ml) conical centrifuge tube, add 5 ml (or 20 ml) acetone with a buret, stopper, and mix by inverting the tube. Let stand for at least 10 minutes to allow the precipitate to flocculate and centrifuge at 2,000 rpm for 5 minutes. Decant and discard the supernatant liquid. Invert and drain the tube on filter paper or toweling for about 5 minutes. Add 5 ml (or 10) acetone, replace stopper, and shake until precipitate disintegrates. Remove stopper and centrifuge at 2,000 rpm for 5 minutes. Decant and drain as before. Add 10 ml (or 40)

water, stopper, and shake until precipitate dissolves. Measure electrical conductivity with a Solu-bridge, using a 2-ml-pipet conductivity cell.

Quantities in parentheses are those used in the laboratory at Riverside, Calif. Adjust instrument to temperature of solution and read concentration of $CaSO_4$ from standard curve.

This curve can be constructed by means of the following data from the International Critical Tables.

$CaSO_4$ concentration (meq/l):	*Electrical conductivity at 25° C (Mmhos/cm)*
1	0.121
2	.226
5	.500
10	.900
20	1.584
30.5	2.205

Calculations

$CaSO_4$ in aliquot (meq)

$$= \text{meq/l } CaSO_4 \text{ from curve} \times \frac{\text{ml } H_2O \text{ to dissolve ppt.}}{1{,}000}$$

$CaSO_4$ in soil (meq/100 g)

$$= \frac{\text{meq } CaSO_4 \text{ in aliquot}}{\text{soil:water ratio}} \times \frac{100}{\text{ml aliquot}}$$

$CaSO_4$ as gypsum (pct.)

$$= \text{meq/100 g } CaSO_4 \times 0.086$$

Report on ovendry basis.

References

Richards (1954).

Indirect estimate 6F1b

Procedure

Add a weighed quantity of soil to enough water to dissolve all the gypsum by overnight shaking. Determine total sulfate in this extract by any appropriate procedure. Also determine Ca and SO_4 in a saturation extract by any appropriate procedure.

Calculations

$$\text{Gypsum} = (SO_4)_{DE} - (SO_4)_{\text{nongypsum SE}}$$

but

$$SO_{4\,\text{nongypsum SE}} = (SO_4)_{SE} - (SO_4)_{\text{gypsum SE}}$$

$\therefore$

$$\text{Gypsum} = (SO_4)_{DE} + (SO_4)_{\text{gypsum SE}} - (SO_4)_{SE}$$

where

$(SO_4)_{DE} = SO_4$ in dilute water extract

$(SO_4)_{SE} = SO_4$ in saturation extract

$(SO_4)_{\text{gypsum SE}} = 30$ meq/l if SO_4 and Ca are $\gtrsim 30$ meq/l

$= (SO_4)_{SE}$ if $(Ca)_{SE} > (SO_4)_{SE}$

$= (Ca)_{SE}$ if $(Ca)_{SE} < (SO_4)_{SE}$

All quantities expressed in meq/100 g.

Gypsum (pct.) = meq/100 g × 0.0861

References

Lagerwerff, Akin, and Moses (1965).

ALUMINUM 6G

KCl extraction I (30 min) 6G1

Reagents

Potassium chloride (KCl), 1*N*.

Procedure

Weigh 10-g soil samples into 125-ml Erlenmeyer flasks. Add 50 ml 1*N* KCl to each flask, mix several times, and let stand for 30 minutes. Filter through 5.5-cm Whatman No. 42 filter paper in Büchner funnel, using suction as necessary. Leach each sample as rapidly as possible with about five 9-ml portions of KCl, using the first to help transfer the remaining soil in the Erlenmeyer flasks to the Büchner funnels. Transfer the extract to 100-ml volumetric flasks and dilute to volume with the extracting solution. Or use Allihn leaching tubes and bring to standard weight in tared suction flasks.

References

Lin and Coleman (1960) and Pratt and Bair (1961).

Aluminon colorimetry I, hot color development* 6G1a

Reagents

Thioglycolic acid ($HSCH_2COOH$).—Dilute 1 ml purified acid to 100 ml with water.

Aluminon reagent.—Dissolve in separate containers 0.75 g Aluminon (ammonium aurine tricarboxylate), 15 g gum acacia, and 200 g NH_4OAc crystals. To the NH_4OAc solution add 189 ml concentrated HCl, then the gum acacia, and finally the Aluminon. Mix, filter, and dilute to 1,500 ml with water. To get the gum acacia in suspension, add slowly to boiling water while stirring constantly.

Aluminum standard.—Add 2.24 g $AlCl_3 \cdot 6H_2O$ per liter of water. This solution should be nearly 250 ppm aluminum. Check concentration of an aliquot containing 10 ppm aluminum by analyzing for chloride.

Procedure

If samples contain less than 5 meq per 100 g aluminum, pipet a 1-ml aliquot of each extract into numbered and calibrated test tubes. If more aluminum is present, dilute before the aliquot is taken. Dilute to approximately 20 ml with distilled water. Add 2 ml dilute thioglycolic acid to each tube, stopper, and shake all the tubes. Pipet 10 ml Aluminon into each tube and dilute to exactly 50 ml. The pH should be between 3.7 and 4.0. Stopper and shake all tubes. Place tubes in a rack and heat in a boiling-water bath for 4 minutes. Cool in running water to room temperature. Transfer samples to reading tubes and measure light transmittance at 535 mμ and compare with a standard curve.

Calculations

$$\text{Al (meq/100 g)} = \frac{\text{mg/l Al from curve}}{\text{g sample}} \times \frac{\text{ml extract}}{\text{ml aliquot}} \times \frac{9}{5}$$

Report on ovendry basis.

References

Chenery (1948) and Yoe and Hill (1927).

Aluminon colorimetry II, HCl predigestion **6G1b**

Procedure

Proceed as in 6G1a but first add 3 ml *N* HCl to the aliquot and heat for 30 minutes at 80° to 90° C.

References

Hsu (1963).

Aluminon colorimetry III, overnight color development **6G1c**

Proceed as in 6G1a except eliminate boiling-water bath, adjust pH to 4.0, and allow color to develop overnight before reading.

Fluoride titration **6G1d**

Reagents

Potassium fluoride (KF), 1*N*.—Titrate with NaOH to a phenolphthalein end point. This eliminates the need for a blank correction in the Al titration.

Sodium hydroxide (NaOH), 0.1*N*, standardized.
Sulfuric acid (H_2SO_4), 0.1*N*, standardized.
Phenolphthalein, 0.1 percent.

Procedure

Add 6 to 8 drops phenophthalein to the leachate in the suction flask (6G1). Titrate with standard NaOH to a pink color that persists for 30 seconds or more. Correct for a KCl blank to obtain KCl-extractable acidity. Then add 10 ml KF, and titrate with standard H_2SO_4 until the pink color disappears. Set aside while other samples are titrated and then complete to a lasting colorless end point. If there is a considerable amount of Al, add a few more drops of phenolphthalein.

Calculations

$$\text{Acidity (meq/100 g)} = \frac{\text{ml NaOH}}{\text{g sample}} \times N \text{ of NaOH} \times 100$$

$$\text{Al (meq/100 g)} = \frac{\text{ml } H_2SO_4}{\text{g sample}} \times N \text{ of } H_2SO_4 \times 100$$

References

Yuan (1959).

Atomic absorption **6G1e**

Apparatus

Perkin-Elmer Model 290 atomic absorption spectrophotometer with nitrous oxide burner attachment.

Reagents

Standard Al solution, 0 to 5 meq per liter.

Procedure

Dilute sample to within range of standard curve. Compare absorbance with standard curve.

Calculations

$$\text{Al (meq/100 g)} = \frac{\text{meq/l from curve}}{\text{g soil}} \times \text{dilution} \times \frac{\text{ml extract}}{10}$$

KCl extraction II, overnight **6G2**

Weigh 10 g soil into 125-ml Erlenmeyer flask. Add 50 ml 1*N* KCl and let stand overnight. In the morning transfer to filter funnels and leach with an additional 50 ml KCl.

Aluminon colorimetry I **6G2a**

Follow procedure for aluminum analysis described in 6G1a.

NH_4OAc extraction **6G3**

Prepare soil as described in 5A1.

Aluminon colorimetry III **6G3a**

Follow procedure of 6G1c.

NaOAc extraction **6G4**

Prepare soil as described in 5A2.

Aluminon colorimetry III **6G4a**

Follow procedure of 6G1c.

Sodium pyrophosphate extraction **6G5**

Prepare extract as described in 6C5.

Atomic absorption **6G5a**

Apparatus

Atomic absorption spectrophotometer.

Reagents

Standard Al solution, 0 to 50 ppm or 0 to 160 ppm.

Procedure

Establish standard curve and match readings from extract to curve readings. Dilute where necessary.

Calculations

$$\text{Al (pct.)} = \text{ppm Al} \times \frac{\text{ml extract}}{\text{g soil}} \times \frac{1}{10{,}000} \times \text{dilution}$$

Report on ovendry basis.

Ammonium oxalate extraction **6G6**

Prepare extract as described in 6C6.

Atomic absorption **6G6a**

Analyze extract as described in 6G5a.

Dithionite-citrate extraction **6G7**

Prepare extract as described in 6C2.

Atomic absorption **6G7a**

Analyze extract as described in 6G5a.

EXTRACTABLE ACIDITY[9] 6H

$BaCl_2$-triethanolamine I **6H1**

Reagents

Buffer solution.—Barium chloride, 0.5*N*, and triethanolamine, 0.2*N*. Add about 90 ml, 1*N* HCl per liter to adjust pH to 8.2. Protect the buffer solution from CO_2 of the air by attaching a drying tube containing soda lime (sodium calcium hydrate) to the air opening at the top of the solution bottle.

Replacement solution.—Barium chloride, 0.5*N*. Add 5 ml buffer solution per liter. Protect the replacement solution from CO_2 of the air by attaching a drying tube similar to that used for the buffer solution.

Procedure

Weigh 5 g soil into a 125-ml Erlenmeyer flask. Add 15 ml buffer solution and let stand for 30 minutes, swirling occasionally to mix. Use 35 ml buffer solution to transfer all the soil solution to a No. 4 Gooch crucible containing a moist Whatman No. 540 filter paper and filter into a 500-ml suction flask. The rate of filtration should be such that at least 30 minutes is needed to complete the filtering and leaching. Then leach the soil with 100 ml of the replacement solution, adding small amounts at a time. It may be necessary to use a larger amount of buffer solution to leach allophanic soils high in organic matter with extractable acidity of more than 35 meq per 100 g.

Back-titration with HCl. **6H1a**

Reagents

Hydrochloric acid (HCl), 0.2*N*, standardized.

Brom cresol green, 0.1-percent aqueous solution.

Mixed indicator.—Dissolve 1.250 g methyl red indicator and 0.825 g methylene blue in 1 liter 90-percent ethanol.

Procedure

Run a blank by adding 100 ml replacement solution, 2 drops brom cresol green, and 10 drops mixed indicator to 50 ml buffer solution. Titrate with HCl to a chosen end point in the range from green to purple. Add 2 drops brom cresol green and 10 drops mixed indicator to the leachate and titrate to the same end point chosen for the blank. Calculate exchange acidity (*EA*) as follows.

Calculations

EA (meq/100 g)

$$= \frac{\text{ml HCl blank} - \text{ml HCl sample}}{\text{g sample}} \times N \text{ of HCl} \times 100$$

Report on ovendry basis.

References

Peech et al. (1947).

$BaCl_2$-triethanolamine II **6H2**

Apparatus

Sulfur absorption tubes.

Whatman No. 41 filter paper or glass-fiber filter paper cut to fit sulfur absorption tubes.

Reagents

Buffer solution.—$BaCl_2$, 0.5*N*, and triethanolamine, 0.2*N* as in 6H1.

Mixed indicator.—Dissolve 1.250 g methyl red and 0.825 g methylene blue in 1 liter 90-percent ethanol.

Celite.

Procedure

Stopper bottom of sulfur absorption tubes with medicine-dropper bulbs and fit to a 300-ml suction flask with a rubber stopper. Place Whatman No. 41 filter paper in bottom of absorption tube, cover with ¼ inch of acid-washed sand, and add exactly 25 ml buffer solution. Weigh 10 g soil and mix with teaspoonful of Celite. Add to the absorption tube by means of a funnel. After 30 minutes remove the medicine-dropper bulbs, wash bulbs out with a little water, and add washings to absorption tubes. Leach with 25 ml more buffer solution and then leach with 100 ml replacement solution in small increments. If necessary, use suction to facilitate leaching.

Back-titration with HCl **6H2a**

Reagents

Same as in 6H1a.

Procedure

Titrate with standard HCl, using either 2 drops brom cresol green and 10 drops methyl red or 10 drops mixed indicator. Use same end point as that chosen for a blank run by leaching sand and Celite with 50 ml buffer solution and 100 ml replacement solution.

Calculations

Use same calculation as in 6H1a.

KCl-triethanolamine* **6H3**

Back-titration with NaOH **6H3a**

Procedure

Leach 10 g soil with 50 ml KCl-triethanolamine solution and follow by washing with 50 ml unbuffered 1*N* KCl. Add a known volume of standard

[9] Reported on some data sheets as exchange acidity and on others as extractable H^+.

acid to leachate and washings and back-titrate with standard alkali (NaOH). Titrate an equal volume of acid to the same end point for a blank.

Calculations

EA (meq/100 g)

$$= \frac{\text{ml NaOH blank} - \text{ml NaOH sample}}{\text{g sample}} \times N \text{ of NaOH} \times 100$$

References

North-Central Regional Research Committee (1955).

CARBONATE 6I

Saturation extract 6I1

Prepare saturation extract as directed in 8A1 or 8B1.

Acid titration 6I1a

Reagents

Sulfuric acid (H_2SO_4), 0.05*N*, standardized. Phenolphthalein.

Procedure

Pipet an appropriate aliquot [10] of saturation extract into a 250-ml Erlenmeyer flask or a porcelain crucible. Make volume to 50 ml (10 ml for porcelain crucible) with water. To the 50 ml in the Erlenmeyer flask, add a drop or two of phenolphthalein. If a pink color is produced, titrate with 0.05*N* H_2SO_4, adding a drop every 2 or 3 seconds until the pink color disappears. Use this solution to determine bicarbonate (6J1a).

Calculations

$$\text{Carbonate (meq/l)} = \frac{\text{ml } H_2SO_4}{\text{ml aliquot}} \times N \text{ of } H_2SO_4 \times 2{,}000$$

References

Association of Official Agricultural Chemists (1945) and Richards (1954).

BICARBONATE 6J

Saturation extract 6J1

Prepare saturation extract as directed in 8A1.

Acid titration 6J1a

Reagents

Sulfuric acid (H_2SO_4), 0.05*N*, standardized. Methyl orange, 0.01-percent aqueous solution.

Procedure

Use solution remaining from carbonate titration (6I1a). To the colorless solution from this titration or to the original solution if no color is produced with phenolphthalein, add 4 drops methyl orange and continue titration to the methyl orange end point without refilling the buret. Retain this solution for the chloride determination (6K1a). Make a blank correction for the methyl orange titration.

Calculations

Bicarbonate (meq/l)

$$= \frac{\text{Total ml } H_2SO_4 - 2 \times \text{ml } H_2SO_4 \text{ (from 6I1a)}}{\text{ml aliquot}} \times N \text{ of } H_2SO_4 \times 1{,}000$$

References

Association of Official Agricultural Chemists (1945) and Richards (1954).

CHLORIDE 6K

Saturation extract 6K1

Prepare saturation extract as described in 8A1 or 8B1.

Mohr titration 6K1a

Reagents

Potassium chromate (K_2CrO_4) indicator.—Dissolve 5 g K_2CrO_4 in water and add a saturated solution of $AgNO_3$ until a permanent slight red precipitate is produced, filter, and dilute to 100 ml.

Silver nitrate ($AgNO_3$), 0.05*N*, standardized.

Sodium bicarbonate ($NaHCO_3$), saturated solution (optional).

Nitric acid (HNO_3), 0.1*N* (optional).

Procedure

To the solution from the bicarbonate titration (6J1a) add 6 drops K_2CrO_4 indicator and titrate with $AgNO_3$ to a reddish-orange end point. Make a correction with a blank of 50 ml water containing the indicators of both titrations. The laboratory at Riverside, Calif., modifies this procedure by adding saturated $NaHCO_3$ solution to a pink end point and neutralizing to a colorless end point with HNO_3 before adding the indicator.

Calculations

Chloride (meq/l)

$$= \frac{\text{ml } AgNO_3 \text{ sample} - \text{ml } AgNO_3 \text{ blank}}{\text{ml aliquot}} \times N \text{ of } AgNO_3 \times 1{,}000$$

References

Association of Official Agricultural Chemists (1945).

[10] The electrical conductivity (EC$\times 10^3$) of the saturation extract (8A1a) can be used to determine the aliquot to be used for carbonate, bicarbonate, and chloride determinations. Where EC$\times 10^3$ is 1.0 or less, use a 10-ml aliquot; if 1.0 to 10.0, use a 5-ml aliquot; if more than 10.0, use a 2-ml aliquot.

Potentiometric titration* **6K1b**

Apparatus

Silver Billet combination electrode, No. 39187.
Zeromatic pH meter (expanded scale).

Reagents

Standard silver nitrate ($AgNO_3$), 0.025*N*.

Buffer solutions.—Either potassium acid phthalate or trisodium citrate and citric acid.

To prepare phthalate buffer, weigh 37.5 g potassium acid phthalate and bring to a volume of 500 ml with water; 4 ml of this buffer added to a 46-ml solution brings the pH to about 4.

To prepare trisodium citrate buffer, weigh 43.8 g trisodium citrate and 43.3 g citric acid into 500-ml volumetric flask and bring to volume with water. Add a small amount of toluene to the solution for storage; 10 ml of this buffer added to a 40-ml solution brings pH to about 4.

Procedure

Standardize the pH meter by adjusting the needle to a convenient setting (about 0.8) on the expanded scale when the electrode is immersed in buffer solution (4 or 10 ml made to 50 ml) without chloride. To titrate the sample, pipet an aliquot containing as much as 2.0 meq chloride into a beaker and add 4 ml buffer. Make to 50 ml. Immerse the electrode and buret tip into the beaker and titrate with $AgNO_3$ to the end point previously established for the buffer without chloride.

Calculations

$$\text{Chloride (meq/l)} = \frac{\text{ml } AgNO_3}{\text{ml aliquot}} \times N \text{ of } AgNO_3 \times 1{,}000$$

SULFATE 6L

Saturation extract 6L1

Prepare saturation extract as described in 8A1 or 8B1.

Gravimetric, $BaSO_4$ precipitation **6L1a**

Reagents

Concentrated hydrochloric acid (HCl).
Barium chloride ($BaCl_2$), 10-percent.
Methyl orange, 0.01-percent.

Procedure

Pipet an aliquot of saturation extract into a 250-ml beaker. Dilute to approximately 100 ml with water. Add 2 drops methyl orange and 0.5 ml concentrated HCl to the beaker. Heat to boiling and add $BaCl_2$ solution by drops, stirring constantly until precipitation is complete. Let stand on hot plate for several hours. Remove from heat and let samples stand overnight. Filter through Gooch crucibles, which have been ignited and weighed. Dry in 105° C oven and ignite in muffle furnace at 1,200° F (650° C) for 30 minutes. Cool in desiccator and weigh.

Calculations

$$SO_4 \text{ (meq/l)} = \frac{\text{mg } BaSO_4}{\text{ml aliquot}} \times 8.568$$

References

Richards (1954).

EDTA titration **6L1b**

Apparatus

Repipet, automatic dilutor, pipet range 0.1 to 1.0 ml.

Titration assembly including a 10-ml buret with magnetic stirrer.

Reagents

Thymol blue indicator, 0.04-percent.

Nitric acid (HNO_3), 0.4*N*.

Calcium nitrate ($Ca(NO_3)_2$), 0.05*N*. Dissolve 5.90 g $Ca(NO_3)_2 \cdot 4H_2O$ in 1 liter CO_2-free water. EC is 5.15±0.15 mmhos per cm at 25° C.

Acetone, reagent grade, boiling range 55.5 to 57.5° C.

Ethanol, 95-percent, reagent grade.

Hydrochloric acid (HCl), 0.01*N*.

EDTA solution, 0.02*N*.—Standardize against $CaCl_2$.

Procedure

Pipet an aliquot containing 0.01 to 0.05 meq SO_4 from soil-water extracts and transfer to a 100-ml beaker. Bring volume to 7.5±0.5 ml with water. Add 2 drops 0.04-percent thymol blue and 0.4*N* HNO_3 drop by drop until color changes from yellow to distinct red. Add 2 ml 0.05*N* $Ca(NO_3)_2$, 20 ml acetone, and stir. Allow 30 minutes for the precipitate to flocculate. Place a 9.0-cm Whatman No. 42 filter paper in a 5.0-cm fluted funnel and fit snugly with water. Wash the sides of filter paper with 5 ml 95-percent ethanol from a wash bottle. Transfer the precipitate and supernatant to the filter paper with alcohol. Rinse the beaker twice and wash filter paper three times, using 3 to 5 ml ethanol per rinse. Allow the alcohol in the filter paper to evaporate. Wash the funnel stem thoroughly with water. Place the beaker that contained the $CaSO_4$ precipitate under the funnel and wash the filter paper with 3 to 5 ml portions of 0.01*N* HCl until approximately 25 ml is leached. Proceed as in 6N1a, except eliminate carbamate and add an extra drop 4*N* NaOH to neutralize the 25 ml 0.01 *N* HCl.

The amount of sulfate is determined from the Ca^{++} content in the $CaSO_4$ precipitate.

Calculations

$$SO_4 \text{(meq/l)} = \frac{\text{ml EDTA}}{\text{ml aliquot}} \times N \text{ of EDTA} \times 1{,}000$$

References

Bower and Wilcox (1965), Lagerwerff, Akin, and Moses (1965), and Nelson (1970).

NH_4OAc extraction **6L2**

Obtain extract by procedure 5B1.

Gravimetric, $BaSO_4$ precipitation **6L2a**

Proceed as in 6L1a. A greater quantity of acid will be needed to lower the pH. Otherwise the procedures are the same.

NITRATE 6M

Saturation extract **6M1**

Prepare saturation extract as described in 8A1 or 8B1.

Phenoldisulfonic acid colorimetry **6M1a**

Reagents

Phenoldisulfonic acid.—Dissolve 25 g phenol in 150 ml concentrated H_2SO_4, add 75 ml fuming H_2SO_4 (13 to 15 percent SO_3), and heat at 100° C for 2 hours.

Standard potassium nitrate (KNO_3), 0.010*N*.

Silver sulfate (Ag_2SO_4), 0.020*N*.

Ammonium hydroxide solution (NH_4OH), 1:1, approximately 7*N*.

Calcium oxide (CaO).

Procedure

First determine the chloride concentration in an aliquot of saturation extract as directed in 6K1a. Pipet another aliquot containing 0.004 to 0.04 meq of nitrate into a 25-ml volumetric flask. Add an amount of Ag_2SO_4 equivalent to the amount of chloride present, dilute to volume, and mix. Separate the precipitate by centrifuging the suspension in a 50-ml centrifuge tube. Transfer the solution to another centrifuge tube, flocculate any suspended organic matter by adding about 0.1 g CaO, and clear by centrifuging again. Pipet a 10-ml aliquot into an 8-cm evaporating dish. Evaporate the aliquot to dryness, cool, and dissolve the residue in 2 ml phenoldisulfonic acid. After 10 minutes, add 10 ml water and transfer to a 100-ml volumetric flask. Make alkaline by adding NH_4OH, dilute to volume, and mix. Measure light transmission through a 460 mμ filter of solution in an optical cell against that of water in a similar cell.

Prepare a calibration curve by pipetting 0-, 0.2-, 0.4-, 0.8-, 1.2-, and 1.6-ml aliquots of standard KNO_3 into evaporating dishes and treating as for sample except for additions of Ag_2SO_4 and CaO and the clarifying procedure.

Calculations

$$NO_3\ (\text{meq/l}) = \frac{\text{meq/l } NO_3 \text{ from curve}}{\text{ml aliquot}} \times 1{,}000$$

References

Richards (1954).

Diphenylamine (qualitative) **6M1b**

Use this procedure to test for nitrates if there is a significant excess of cations over anions in the extract. A quantitative measurement can be made if there is a positive indication of NO_3 (6M1a).

Apparatus

Dropper pipet.

White spot plate.

Reagents

Diphenylamine in H_2SO_4.—Dissolve 0.05 g diphenylamine in 25 ml concentrated sulfuric acid. Store in polyethylene dropper bottle.

Procedure

Place a drop of extract in a spot plate and add 3 or 4 drops diphenylamine reagent. Nitrate is present if a blue color develops.

References

Treadwell and Hall (1943).

CALCIUM 6N

Saturation extract **6N1**

Prepare saturation extract as described in 8A1 or 8B1.

EDTA titration **6N1a**

Reagents

Sodium hydroxide (NaOH), approximately 4*N*.

Calcium chloride ($CaCl_2$), 0.02*N*.—Dissolve calcite crystals in HCl and make to volume.

Murexide.—Thoroughly mix 0.5 g ammonium purpurate with 100 g powdered potassium sulfate (K_2SO_4).

EDTA solution, 0.02*N*.—Standardize against $CaCl_2$.

Sodium diethyldithiocarbamate, 1-percent.

Procedure

Pipet an aliquot containing 0.02 to 0.20 meq of calcium into a beaker. Add 5 drops carbamate, 1 drop NaOH for each 5-ml aliquot, and a suitable amount (15 to 20 mg for a 10-ml aliquot) of murexide, mixing after each addition. A magnetic stirrer is helpful. Titrate with EDTA to a lavender end point. A blank containing NaOH, murexide, carbamate, and a drop or two of EDTA helps to distinguish the end point. If the sample is overtitrated with EDTA, it can be back-titrated with standard $CaCl_2$. Retain solution for magnesium determination (6O1a).

Calculations

$$Ca\,(\text{meq/l}) = \frac{\text{ml EDTA}}{\text{ml aliquot}} \times N \text{ of EDTA} \times 1{,}000$$

References

Cheng and Bray (1951).

Atomic absorption **6N1b**

Apparatus

Perkin-Elmer Model 290 atomic absorption spectrophotometer.

Hollow cathode, multielement Ca, Mg tube.

Diluter.

Reagents

Standard Ca solution, 0–0.5 meq per liter.

Lanthanum stock solution, 65,000 ppm. Slowly dissolve 76.2 g La_2O_3 in 300 ml 6*N* HCl and dilute to 1 liter.

Procedure

Prepare standards and samples with approximately one half of 1 percent (5,000 ppm) Lanthanum. Determine unknowns by comparing with curve derived from standard samples.

Calculations

$$\text{Ca (meq/l)} = \text{Ca from curve (meq/l)} \times \text{dilution}$$

NH_4OAc extraction **6N2**

Prepare NH_4OAc extract as described in 5A1.

EDTA-alcohol separation **6N2a**

Reagents

Standard calcium chloride ($CaCl_2$), 5 mg per ml.—Dissolve calcite crystals in HCl and make to volume.

Ethanol, 95-percent.

Standard EDTA.—Dissolve 1.25 g disodium ethylenediaminetetraacetate in water and dilute to a volume of 1 liter. Standardize against solutions containing known amounts of calcium and magnesium. Run the standards through the separation procedure before titrating.

Sodium hydroxide (NaOH), 10-percent aqueous solution.

Calcon.—Dissolve 1 g Calcon (Eriochrome Blue Black R) in 100 ml triethanolamine.

Procedure

Pipet 25-ml aliquots from the pH 7, NH_4OAc extracts obtained in the total exchange-capacity procedure (5A1) into 100-ml beakers and evaporate to dryness at moderate heat. Cool and add 3 ml *N* HNO_3 to dissolve the residue. Transfer the solution quantitatively to 50-ml conical centrifuge tubes with ethanol, using a wash bottle with a fine delivery tip. Add 1 ml 6*N* H_2SO_4. While mixing the contents of the tube by swirling, add approximately 34 ml 95-percent ethanol. Cover the tubes and let stand overnight. The next morning remove the covers and centrifuge the tubes at about 2,000 rpm (Int. No. II centrifuge) for 15 minutes. Decant the alcohol solution into 250-ml Erlenmeyer flasks and retain for the magnesium determination. Use the $CaSO_4$ precipitate for calcium determination.

Break up the $CaSO_4$ precipitate with a small steam of water from a wash bottle and transfer the precipitate and solution to 250-ml Erlenmeyer flasks. Dilute the solution to a total volume of about 100 ml. Place the sample on a magnetic stirrer, add 5 ml 10-percent NaOH, 2 drops Calcon indicator solution, and titrate with the standard EDTA solution to the blue color of a blank carried through the procedure. The pH of the solution should be about 12.5. The color change is from red to clear blue. Titrate until the color in the sample and in the blank are the same.

Calculations

$$\text{Ca (meq/100 g)} = \frac{\text{ml EDTA}}{\text{g sample}} \times N \text{ of EDTA} \times \frac{\text{ml extract}}{\text{ml aliquot}} \times 100$$

Report on ovendry basis.

References

Barrows and Simpson (1962).

Oxalate precipitation I, $KMnO_4$ titration **6N2b**

Reagents

Oxalic acid ($C_2H_2O_4$), 5-percent aqueous solution.

Brom cresol green, 0.04-percent aqueous solution.

Ammonium hydroxide (NH_4OH), 1*N*.

Sulfuric acid (H_2SO_4), 1*N*.

Standard potassium permanganate ($KMnO_4$), 0.05*N*.

Wash solution, saturated calcium oxalate (CaC_2O_4).

Asbestos.—Digest asbestos in 1*N* HNO_3 solution containing just enough $KMnO_4$ to give a deep purple color. Add more permanganate if the color disappears; digest for 24 hours or until the permanganate color is permanent. Destroy the excess permanganate with oxalic acid and wash thoroughly on a Büchner funnel.

Procedure

Transfer an aliquot of the filtrate (5A1) to a 400-ml Pyrex beaker and evaporate to complete dryness. Cool, cover the beaker with a watchglass, and slowly add through the lip 10 ml concentrated HNO_3 and 2 ml concentrated HCl. Warm until the reaction has subsided and no more brown fumes are given off. Rinse the watchglass into the beaker. Evaporate to dryness at low heat to prevent spattering and continue to heat for about 10 minutes to dehydrate the salts. Then place the beaker in an electric muffle furnace at about 150° C, heat to 390° ±10°, and hold at this temperature for about 20 minutes. Remove the beaker from the muffle furnace and cool. Treat the residue with 3 ml 6*N* HCl, evaporate to dryness at low heat, and continue heating for about 30 minutes longer to dehydrate silica. Cool and dissolve the residue in 0.1*N* HNO_3, using a rubber policeman to loosen the residue.

Add 5 ml oxalic acid, heat the contents of the beaker almost to boiling, and add 1 ml brom cresol green. Adjust the pH of the hot solution to approx-

imately 4.6 by slowly adding N NH_4OH, stirring constantly. Let digest at about 80° C for 1 hour or until the supernatant liquid is clear. Collect the CaC_2O_4 precipitate on a compact asbestos pad in a Gooch crucible or in a Whatman No. 42 filter paper in filter funnel. Rinse the beaker four times with water or water saturated with CaC_2O_4 and pour the washings into the crucible. Wash the precipitate five more times with water saturated with CaC_2O_4.

Remove the Gooch crucible from its holder, rinse the outside, and replace crucible in the beaker. If filter paper is used, pierce the paper and wash most of the precipitate into the beaker with 3.6N H_2SO_4. Wash off excess H_2SO_4 with water and place filter paper on watchglass. Add 100 ml water and 7 ml concentrated H_2SO_4. Heat to 90° C and stir until CaC_2O_4 is dissolved. Titrate with standard $KMnO_4$ solution to a pink color. Add filter paper to solution and titrate to a permanent pink color.

Calculations

Ca (meq/100 g)

$$=\frac{\text{ml } KMnO_4}{\text{g sample}}\times N \text{ of } KMnO_4\times\frac{\text{ml extract}}{\text{ml aliquot}}\times 100$$

Report on ovendry basis.

References

Peech et al. (1947).

Oxalate precipitation II, $KMnO_4$ titration (Fe, Al and Mn removed)* **6N2c**

Proceed as in 6N2b but after muffle treatment and before oxalate precipitation, remove iron, aluminum, and manganese by the following procedure.

Reagents

Hydrochloric acid (HCl), 6N.

Ammonium hydroxide (NH_4OH), 2N.

Bromine water, saturated.

Ammonium chloride (NH_4Cl), 6N.

Concentrated nitric acid (HNO_3).

Procedure

Dissolve salts and oxides by adding 5 ml 6N HCl and heating on a hot plate until all salts and oxides are in solution. Add 75 to 100 ml water and heat the solution until it is nearly boiling. Immerse the pH electrodes into the hot solution and precipitate the hydroxides of iron, aluminum, and titanium by slowly adding 2N NH_4OH until the meter indicates a pH of 6.2 to 6.4. Add 2 more drops of NH_4OH to neutralize the acidifying effect of the 15 ml saturated bromine water, which is slowly added next to precipitate manganese hydroxide. Since bromine water lowers the pH of the solution, readjust it to 6.2 to 6.4 with 2N NH_4OH. Heat the solution with precipitate until it just begins to boil (1 or 2 min on a Bunsen burner) and remove from the heat.

Place on a hot plate at a temperature of 80° to 90° C for 1 hour. Filter when the breaker has cooled enough to handle easily. Use an 11-cm Whatman No. 42 filter paper or its equivalent. Collect the filtrate in a beaker of the same size as those used for precipitating calcium. Wash and police the beaker containing the precipitate with hot 2-percent NH_4Cl. Wash the precipitate on the filter with the same solution. Five washings are usually enough. To the filtrate add 10 ml concentrated HNO_3 and evaporate to dryness; add 5.0 ml 6N HCl, take to dryness, and use high heat to dehydrate silica. Proceed with the calcium precipitation (6N2b).

References

Washington (1930) and Fieldes et al. (1951).

Oxalate precipitation, cerate titration* **6N2d**

Proceed as in 6N2b except substitute the following for the permanganate titration.

Reagents

Ammonium hexanitrate cerate ($(NH_4)_2Ce(NO_3)_6$) in molar perchloric acid ($HClO_4$), 0.1N.—Add 85 ml 70- to 72-percent perchloric acid to 500 ml water. Dissolve 56 g ammonium hexanitrate cerate in the acid solution and dilute to 1 liter.

Ammonium hexanitrate cerate in molar perchloric acid, 0.05N.—Follow the directions for the preparation of the 0.1N solution but use only 28 g cerate.

Perchloric acid ($HClO_4$), 2N.—Add 170 ml 70- to 72-percent perchloric acid to 500 ml water and dilute to 1 liter.

Nitro-ferroin indicator solution.—Dilute a solution of nitro-orthophenanthroline ferrous sulfate with water to a convenient working strength. Two to four drops of the solution should give a sharp color change at the end point.

Standardize the cerate solutions against accurately weighed quantities of primary standard-grade sodium oxalate. Convenient weights of sodium oxalate are 0.10 to 0.11 g for the 0.05N solution and 0.10 to 0.18 g for the 0.1N cerate solution. Dissolve the sodium oxalate in 100 to 150 ml 2N perchloric acid and titrate as directed in the following procedure.

Procedure

Dissolve the filtered and washed (use water) calcium oxalate in 100 to 200 ml 2N perchloric acid. If a paper filter has been used, macerate it before titration. Add 2 to 4 drops of nitro-ferroin indicator solution and titrate with 0.05N or 0.1N cerate solution, depending upon the amount of oxalate present. The solution changes from red to colorless at the end point.

Calculations

$$\text{Ca (meq/100 g)} = \frac{\text{ml cerate}}{\text{g sample}} \times N \text{ of cerate} \times \frac{\text{ml extract}}{\text{ml aliquot}} \times 100$$

Report on ovendry basis.

Atomic absorption **6N2e**

Proceed as in 6N1b except use sample from NH_4OAc extract.

Calculations

Ca (meq/100 gm)

$$= \frac{\text{Ca meq/l from curve}}{\text{g sample}} \times \text{dilution} \times \frac{\text{ml extract}}{10}$$

Report on ovendry basis.

NH_4Cl-ethanol extraction (calcareous soils) 6N3

Apparatus

Figure 8.

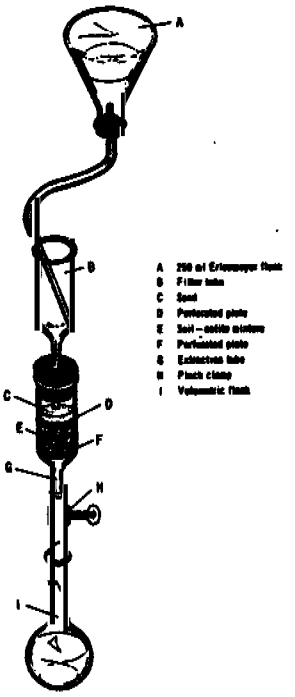

FIGURE 8.—Apparatus for ammonium chloride-ethanol extraction for calcium (6N3).

Reagents

Ammonium chloride (NH_4Cl), 1*N*, in 60-percent ethanol.—To make 9 liters of extraction solution, dissolve 482 g NH_4Cl in 2,835 ml water and add 5,985 ml 95-percent ethanol. Adjust pH to 8.5 with 140 to 145 ml NH_4OH.

Celite.

Procedure

Fill extraction tube with water, set tube upright in holder, and let most of the water drain out. Close screw clamp and place filter paper on plate with a stirring rod. Let remainder of the water drain out of tube. The filter paper provides enough tension to keep the bottom part of the tube filled with water. Place tube on the rack and add about 1½ teaspoons washed sand. Place an extra perforated plate (inverted) on top of the sand and cover the plate with more sand. Place heaping teaspoon of Celite on the sand and pour about 20 ml extraction solution into the tube. Pour remainder of 400 ml extraction solution into a 500-ml Erlenmeyer flask. Add soil sample slowly and then stir with a rod to mix soil and Celite. Allow sample to settle and then place filter paper on top of the soil column. Put upper tube in place, stopper, and let stand overnight.

In the morning, place a 500-ml volumetric flask under the delivery tip and open screw clamp on lower extraction tube slowly. When level of liquid is a few milliliters above the soil, invert the 500-ml Erlenmeyer flask containing remainder of extraction solution (delivery tube in place), place glass tip in the upper tube, and open the pinch clamp. Use the screw clamp on lower tube to adjust flow rate through soil column. When all the extraction solution has passed through the soil column, remove volumetric flask, make to volume with water, and mix.

EDTA titration **6N3a**

Pipet a 50-ml aliquot for determination of Ca and Mg into a 100-ml beaker and evaporate to dryness. Add 10-ml concentrated HNO^3 and 1 or 2 ml concentrated HCl. Cover with watchglass, place on hot plate, and heat until no more brown fumes are evolved. Remove cover glass, rinse into beaker, and evaporate solution to dryness. Take up residue with 3 ml *N* HNO_3. Quantitatively transfer solution with ethanol to a 50-ml conical centrifuge tube and proceed with determination of Ca according to 6N2a.

References

Tucker (1954).

KCl-triethanolamine extraction* 6N4

Prepare extract as in procedure 5B2.

Oxalate-permanganate titration **6N4a**

Proceed as in 6N2b.

EDTA titration **6N4b**

Reagents

Sodium hydroxide (NaOH), 4*N*.

EDTA 0.02*N*.—Dissolve 3.723 g disodium dihydrogen ethylenediamine tetraacetate in water and dilute to 1 liter. Standardize the solution against standard $CaCl_2$ prepared in the TEA buffer solution.

Ammonium purpurate (murexide) indicator.—Thoroughly mix 0.5 g ammonium purpurate with 100 g powdered potassium sulfate.

Eriochrome Black T (Erio T) indicator. Dissolve 0.5 g Erio T in 100 ml of triethanolamine.

Procedure

Pipet a 5-ml aliquot of extract from procedure 5B3 into a 100-ml beaker. Add 20 ml water, 5 drops 4*N* NaOH, and 50 mg murexide. Titrate with standard EDTA using a 10-ml microburet. Approach the end point slowly (orange-red to lavender or purple). Save the solution for the Mg^{++} determination.

Calculations

Ca (meq/100 g)

$$= \frac{\text{ml EDTA}}{\text{g sample}} \times N \text{ of EDTA} \times \frac{\text{ml extract}}{\text{ml aliquot}} \times 100$$

References

Bower and Wilcox (1965).

Atomic absorption **6N4c**

Proceed as in 6N1b except use sample from KCl–TEA extraction.

MAGNESIUM 6O

Saturation extract 6O1

Prepare saturation extract as described in 8A1 or 8B1.

EDTA titration **6O1a**

Reagents

Buffer solution.—Mix 33.75 g NH_4Cl with 285 ml concentrated (15*N*) NH_4OH, add 5 g disodium Mg-versenate and dilute to 500 ml.

Eriochrome Black T indicator.—Dissolve 0.5 g Eriochrome Black T (F 241) and 4.5 g hydroxylamine hydrochloride ($NH_2OH \cdot HCl$) in 100 ml 95-percent ethanol or dissolve 1.0 g Eriochrome Black T in 100 ml triethanolamine.

EDTA 0.02*N*.—Standardize with magnesium soluti n.

Procedure

To the sample just titrated for calcium (6N1a) add 3 or 4 drops concentrated HCl, stir until the murexide is destroyed, add 1 ml NH_4Cl—NH_4OH buffer solution, 1 or 2 drops Eriochrome Black T indicator, and complete the titration for magnesium, using EDTA. The end point should be a clear blue with no tinge of red.

Calculations

Mg (meq/100 g)

$$= \frac{\text{ml EDTA}}{\text{g sample}} \times N \text{ of EDTA} \times \frac{\text{ml extract}}{\text{ml aliquot}} \times 100$$

Report on ovendry basis.

References

Cheng and Bray (1951).

Atomic absorption **6O1b**

Apparatus

Perkin Elmer Model 290 atomic absorption spectrophotometer.

Hollow cathode multielement Ca, Mg tube.

Diluter.

Reagents

Standard Mg solution, 0.0 to 0.05 or 0.0 to 0.1 meq per liter.

Procedure

Prepare standard and samples. Dilute and determine unknown by comparing with curve derived from standard solutions.

Calculations

Mg (meq/l) = Mg from curve (meq/l) × dilution

NH_4OAc extraction 6O2

Prepare NH_4OAc extract as described in 5A1.

EDTA titration, alcohol separation **6O2a**

Reagents

Buffer solution.—Dissolve 67.5 g NH_4Cl in about 400 ml water. Add 570 ml concentrated NH_4OH and dilute to 1 liter with water.

Hydroxylamine hydrochloride ($NH_2OH \cdot HCl$), 5-percent aqueous solution. Prepare fresh solution every 10 days.

Potassium ferrocyanide ($K_4Fe(CN)_6 \cdot 3H_2O$), 4-percent aqueous solution.

Triethanolamine, U.S.P.

Eriochrome Black T.—Dissolve 1 g Eriochrome Black T (Superchrome Black TS) in 100 ml triethanolamine.

Standard magnesium solution, 5.0 mg per milliliter.—Transfer 2.500 g unoxidized reagent-grade magnesium metal to a 500-ml volumetric flask. Add 150 ml water and 20 ml concentrated HCl. When in solution, make to volume with water and mix. Dilute an aliquot of this solution to get a solution containing 0.5 mg magnesium per milliliter.

EDTA, 0.02*N*.—Standardize with magnesium standard solution.

Procedure

Place the Erlenmeyer flasks containing the alcohol solution retained from the $CaSO_4$ separation (6N2a) on a hot plate and evaporate the alcohol at moderate heat. Do not evaporate to complete dryness. Cool and dilute to 100 ml with water and add 5 ml buffer solution and 10 drops each of hydroxylamine hydrochloride, potassium ferrocyanide, and triethanolamine. Stir and let stand 5 to 10 minutes. Place the sample on the stirrer, add 2 drops Eriochrome Black T, and titrate with standard EDTA to the ice-blue end point. The color change is from red through wine to ice blue. A blank carried through this procedure

usually requires 0.3 to 0.8 ml EDTA to get the proper ice-blue color. Correct for a blank carried through this procedure and use the corrected titration to calculate the magnesium in the sample.

Calculations

Mg (meq/100 g)

$$=\frac{\text{ml EDTA}}{\text{g sample}}\times N \text{ of EDTA}\times\frac{\text{ml extract}}{\text{ml aliquot}}\times 100$$

Report on ovendry basis.

References

Barrows and Simpson (1962).

Phosphate titration **6O2b**

Reagents

Sodium hydroxide (NaOH), 0.1*N*, standardized.—Protect from CO_2 of the air with a soda-lime trap.

Sulfuric acid (H_2SO_4), 0.1*N*.

Ammonium hydroxide (NH_4OH), concentrated.

Diammonium hydrogen phosphate ($(NH_4)_2HPO_4$), 10-percent solution.

Brom cresol green, 0.1-percent aqueous solution.

Hydrochloric acid (HCl), 1:1.

Carbon-dioxide-free water.—Boil water in a 5-liter round-bottom boiling flask for about 15 minutes. Cool and protect from CO_2 of the air with a soda-lime trap.

Procedure

Transfer the filtrate from the calcium determination (6N2b, 6N2c, or 6N2d) to a 400-ml beaker, add 10 ml concentrated HNO_3, cover with a 3.5-inch Speedyvap watchglass and evaporate to dryness. Dissolve the residue in 5 ml 1:1 HCl and transfer to a 250-ml Erlenmeyer flask, policing twice and rinsing the beaker twice after final policing. The volume of solution should be about 75 ml or more. Using 3 to 4 drops brom cresol green indicator, neutralize the solution with concentrated NH_4OH added by drops. Add 5 ml 10-percent $(NH_4)_2HPO_4$ and 10 ml concentrated NH_4OH. Heat the solution just to boiling, cool, stopper, and let stand overnight.

Filter through a 9-cm Whatman No. 40 filter paper, pouring the solution down a stirring rod. Rinse the flask five times with 1*N* NH_4OH and pour the rinsings onto the filter. Wash the precipitate on the filter five more times with 1*N* NH_4OH. Place the wet filter paper with precipitate on a watchglass and let dry at no more than 40° C until free of ammonia. Place the dry filter in the original flask, add 5 drops brom cresol green and 10 ml 0.1*N* H_2SO_4 or more if necessary to dissolve the precipitate. The solution should be yellow. After most of the precipitate has dissolved, add 50 ml CO_2-free water, stopper the flask, and shake vigorously until the filter paper is macerated. Remove the stopper and rinse it and the flask walls with CO_2-free water. Back-titrate with standard 0.1*N* NaOH to pH 4.5. To determine the correct end point, prepare a color standard by pipetting 5 ml potassium dihydrogen phosphate (2-percent solution) into a 250-ml Erlenmeyer flask, adding 65 ml water, 5 drops brom cresol green, and a macerated filter paper.

Calculations

$$\text{Mg (meq/100 g)}=\frac{\text{ml NaOH blank}-\text{ml NaOH sample}}{\text{g sample}}\times N \text{ of NaOH}\times\frac{\text{ml extract}}{\text{ml aliquot}}\times 100$$

Report on ovendry basis.

References

Peech et al. (1947).

Gravimetric, magnesium pyrophosphate **6O2c**

Reagents

Diammonium hydrogen phosphate ($(NH_4)_2HPO_4$), 10-percent solution.

Nitric acid (HNO_3), concentrated.

Ammonium hydroxide (NH_4OH), concentrated.

Ammonium hydroxide (NH_4OH), 1:1.

Hydrochloric acid (HCl), 6*N*.

Procedure

Continue analysis on filtrate from oxalate precipitation (6N2b). This filtrate will probably fill a 150-ml beaker. Place cover glass on filtrate and heat at a low temperature. When volume has been reduced, add 20 ml concentrated HNO_3. Evaporate to complete dryness and wash cover glass and sides of beaker with water. Dissolve residue in 5 ml 6*N* HCl and then dilute to about 75 ml. Add 2 or 3 drops brom cresol green and bring pH to 4.6 with 1:1 NH_4OH. Add 5 ml 10-percent diammonium hydrogen phosphate (make up fresh each time). Add 10 ml concentrated NH_4OH, stir solution vigorously until a precipitate forms, and let stand overnight.

On the next day filter on a 11.0-cm Whatman No. 42 filter paper, rinse beaker five times with 1*N* NH_4OH, and pour washings into the filter. Wash the precipitate in the filter five more times with 1*N* NH_4OH. Place filter in oven to dry (2 to 3 hours) and evolve NH_4OH to prevent any explosion in the muffle furnace. Place crucibles (Coors 000) with filters containing magnesium precipitate in muffle furnace. Raise temperature gradually to 1,000° C and hold at 1,000° C for 1 hour. Allow muffle furnace to cool down and remove crucibles. Place in desiccator and dry over phosphorus pentoxide (P_2O_5). Weigh $Mg_2P_2O_7$ and record.

Calculations

$$\text{Mg (meq/100 g)}=\frac{\text{mg } Mg_2P_2O_7}{\text{g sample}}\times\frac{\text{ml extract}}{\text{ml aliquot}}\times 1.797$$

Report on ovendry basis.

Atomic absorption **6O2d**

Procedure

Proceed as in 6O1b except use samples from NH_4OAc extract.

Calculation

$$\text{Mg (meq/100 g)} = \text{Mg from curve (meq/l)} \times \text{dilution} \times \frac{\text{ml extract}}{10}$$

NH_4Cl-ethanol extraction (calcareous soils) 6O3

Proceed as in 6N3.

EDTA titration **6O3a**

Proceed as in 6N3a except determine magnesium in alcohol extract by method 6O2a.

KCl-triethanolamine extraction 6O4

Prepare extract as described in 5B2 or 5B3.

Phosphate titration* **6O4a**

Proceed as in 6O2b except use extract from 5B2 or 5B3.

EDTA titration **6O4b**

Reagents

Concentrated hydrochloric acid (HCl).

Concentrated ammonium hydroxide (NH_4OH).

EDTA 0.02*N*.—Dissolve 3.723 g disodium dihydrogen ethylenediaminetetraacetate in water and dilute to a volume of 1,000 ml. Standardize the solution against standard $MgCl_2$.

Eriochrome Black T (Erio T) indicator. Dissolve 0.5 g Erio T in 100 ml triethanolamine.

Procedure

Add 4 or 5 drops concentrated HCl to the solution used for the calcium determination (6N4b). Set aside until the murexide turns colorless. Add 15 to 20 drops concentrated NH_4OH. This should bring the pH between 10.0 and 10.3. Add 1 drop Erio T and titrate with EDTA to a clear blue end point.

Calculations

$$\text{Mg (meq/100 g)} = \frac{\text{ml EDTA}}{\text{g sample}} \times N\ \text{EDTA} \times \frac{\text{ml extract}}{\text{ml aliquot}} \times 100$$

Report on ovendry basis.

Atomic absorption **6O4c**

Proceed as in 6O1b except use samples from the KCl-TEA extract.

SODIUM 6P

Saturation extract 6P1

Prepare saturation extract as described in 8A1 or 8B1.

Flame photometry **6P1a**

Apparatus

Beckman Model DU spectrophotometer with flame attachment.

Reagents

Standard sodium solutions, 0.0 to 2.0 meq per liter.

Concentrated hydrochloric acid (HCl).

Hydrochloric acid (HCl), 6*N*.

Hydrochloric acid (HCl), 0.4*N*.

Concentrated nitric acid (HNO_3).

Procedure

Pipet an aliquot of appropriate size (5 to 25 ml) of the saturation extract into a 100-ml beaker and evaporate to dryness on a hot plate. Treat the residue with 1 ml concentrated HCl and 3 ml concentrated HNO_3 and again evaporate to dryness on the hot plate. Repeat the acid treatment on the residue. Add 5 ml 6*N* HCl to the residue and bring to dryness. Then raise the temperature to high for 20 minutes to render the silica insoluble. Wash and filter the residue into 50-ml volumetric flasks, using 0.4*N* HCl. Determine flame luminosity of samples appropriately diluted and compare with luminosity of standard solutions made up with 0.4*N* HCl. The evaporation and dehydration steps are used only where there is enough silica to clog the burner. If they are not used, merely dilute the sample.

Calculations

$$\text{Na (meq/l)} = \text{meq/l Na from curve} \times \text{dilution}$$

Atomic absorption **6P1b**

Apparatus

Atomic absorption spectrophotometer with Osram lamp attachment.

Reagents

Standard sodium chloride (NaCl) solution.

Procedure

Compare absorption of unknown with that of a standard curve.

Calculations

$$\text{Na (meq/l)} = \text{meq/l from curve} \times \text{dilution}$$

NH_4OAc extraction 6P2

Flame photometry **6P2a**

Proceed as in 6P1a except make standard solutions in NH_4OAc. The evaporation and dehydration steps can be eliminated.

Calculations

$$\text{Na (meq/100 g)} = \frac{\text{meq/l Na from curve}}{\text{g sample}} \times \text{dilution} \times \frac{\text{ml extract}}{10}$$

Report on ovendry basis.

References

Fieldes et al. (1951).

Atomic absorption **6P2b**

Proceed as in 6P1b except use standards prepared in NH_4OAc.

Calculations

$$\text{Na (meq/100 g)} = \frac{\text{meq/l Na from curve}}{\text{g sample}} \times \text{dilution} \times \frac{\text{ml extract}}{10}$$

Report on ovendry basis.

POTASSIUM **6Q**

Saturation extract **6Q1**

Prepare saturation extract as described in 8A1 or 8B1.

Flame photometry **6Q1a**

Apparatus

Beckman Model DU spectrophotometer with flame attachment.

Reagents

Standard potassium chloride (KCl) solutions ranging from 0.0 to 1.0 meq per liter.

Procedure

Proceed as in 6P1a. Determine flame luminosity of potassium at 768 mμ and compare with that of the standard solutions.

Calculations

$$\text{K (meq/l)} = \text{meq/l K from curve} \times \text{dilution}$$

References

Fieldes et al. (1951).

Atomic absorption **6Q1b**

Apparatus

Atomic absorption spectrophotometer with Osram lamp attachment. Hydrogen flame with 2-inch standard burner.

Reagents

Standard potassium chloride (KCl) solution.

Procedure

Compare absorption of unknown with that of a standard curve.

Calculations

$$\text{K (meq/l)} = \text{meq/l from curve} \times \text{dilution}$$

NH_4OAc extraction **6Q2**

Prepare NH_4OAc extract as described in 5A1.

Flame photometry **6Q2a**

Proceed as in 6Q1a except make up standards in NH_4OAc solution.

Calculations

$$\text{K (meq/100 g)} = \frac{\text{meq/l K from curve}}{\text{g sample}} \times \text{dilution} \times \frac{\text{ml extract}}{10}$$

Report on ovendry basis.

Atomic absorption **6Q2b**

Proceed as in 6P1b except use standards prepared in NH_4OAc.

Calculations

$$\text{K (meq/100 g)} = \frac{\text{meq/l K from curve}}{\text{g sample}} \times \text{dilution} \times \frac{\text{ml extract}}{10}$$

Report on ovendry basis.

SULFUR **6R**

$NaHCO_3$ extract, pH 8.5 **6R1**

Reagents

Sodium bicarbonate ($NaHCO_3$), 0.5*M*. Adjust to pH 8.5 with NaOH.

Procedure

Add 40 ml $NaHCO_3$ solution to 10 g soil in 125-ml Erlenmeyer flask. Shake for 60 minutes and filter through Whatman No. 42 filter paper. Sulfur can be determined on a 2.0-ml aliquot of this filtrate by using methylene blue colorimetry.

Methylene blue colorimetry **6R1a**

References

Kilmer and Nearpass (1960).

HCl release (sulfide) **6R2**

Apparatus

Nitrogen tank (water pumped).

Scrubber.—250-ml Erlenmeyer flask equipped with three-hole rubber stopper to accommodate entry and exit for sweep gas, and a 4-foot glass tube to serve as a manometer.

Reaction flask.—250-ml Erlenmeyer equipped with three-hole rubber stopper to accommodate entry and exit for sweep gas, and a buret for adding acid. Reaction flask sits on a magnetic stirrer.

Collection bottles.—Two 500-ml bottles (No. 8 rubber stopper), each fitted with a two-hole rubber stopper to accommodate entry and exit tubes for sweep gas. The entry tubes should be detachable below the rubber stopper (fig. 9). Attach a pinch clamp to the exit tube to help control the flow rate of gases.

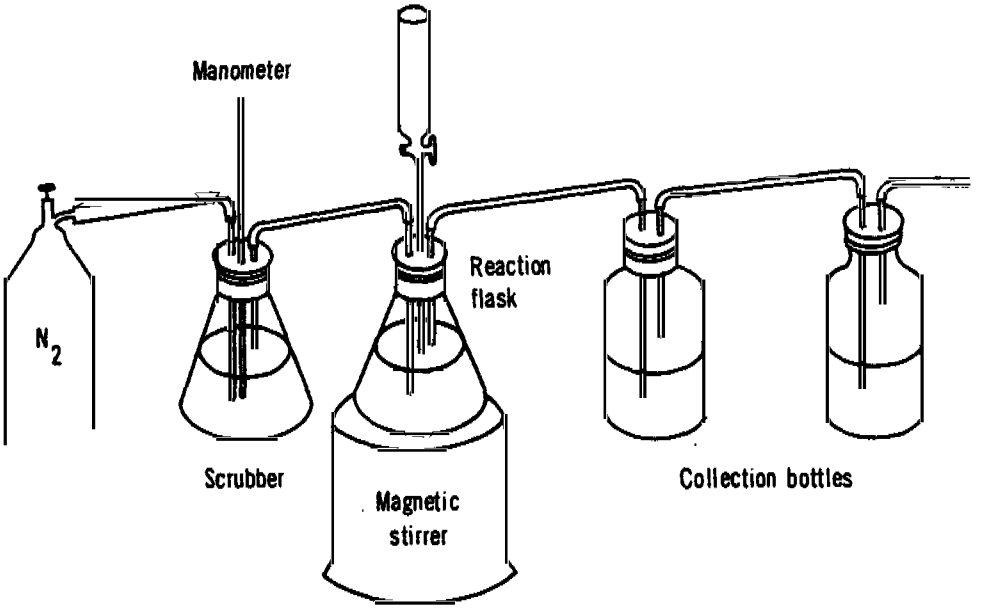

FIGURE 9.—Apparatus for sweeping moist sample with nitrogen (6R2).

Procedure

Place 10 ml zinc acetate solution in collection flask. Add water to 150 ml volume and place flask in train. Add moist sample (collected as in 1A2b) in tared reaction flask (250-ml Erlenmeyer), introduce N_2 gas (unless sample is run immediately), stopper, and weigh. Determine moisture content on a separate sample. Place flask in collection train. Sweep with N_2 gas for about 5 minutes. Reduce flow until pressure drops enough so that 50 to 60 ml of 6*N* HCl can be added to reaction flask. Adjust flow of N_2 to about 4 bubbles per second in collection flask and turn on stirrer. Collect sample for 45 to 60 minutes. Second collection bottle should be a blank. Cut flow, disconnect entry tube but leave in collection bottle, remove collection bottles, and stopper until ready to titrate.

Iodine titration **6R2a**

Apparatus

Iodine applicator, approximately a 50-ml reservoir with stopcock delivery in a two-hole rubber stopper (No. 8). Fit a glass tube for air exit through the stopper.
Buret for thiosulfate.
Magnetic stirrer.

Reagents

Iodine 0.1*N*, standardized.
Sodium thiosulfate 0.1*N*, standardized.
Starch indicator.
Hydrochloric acid (HCl), 6*N*.

Procedure

Mix an aliquot of standardized iodine solution and 5 ml of 6*N* HCl in iodine applicator. Place applicator on bottle and add acidified iodine. Wash contents of applicator, quantitatively, into bottle. Remove applicator, stopper bottle, and swirl so that iodine enters the top of the entry tube from collection train. Any white precipitate of ZnS should dissolve off entry tube. Remove stopper and titrate with standardized thiosulfate until iodine color becomes faint. Add 1 or 2 ml starch indicator and titrate until blue color changes to clear. The end point is abrupt. Stopper bottle and again swirl so that solution passes through the entry tube. Blue color should reappear. Again titrate to the end point. Magnetic stirrer can be used to mix the sample.

Calculations

S (meq/100 g)

$$= \frac{(\text{ml thio for blank} - \text{ml thio for sample})\ N \text{ of thio}}{\text{weight of sample}} \times 100$$

References

Pierce and Haenisch (1955), Johnson and Ulrich (1959), and Chapman and Pratt (1961).

TOTAL PHOSPHORUS 6S

Perchloric acid digestion 6S1

Perchloric acid is extremely hazardous and subject to explosion if improperly handled. Do not attempt this procedure unless the hazards are well understood and the laboratory is specially equipped to handle perchloric acid digestion.

Reagents

Perchloric acid ($HClO_4$), 60-percent.
Concentrated nitric acid (HNO_3).
Concentrated hydrochloric acid (HCl).

Procedure

Weigh 2.000 g ovendry soil, ground to approximately 100 mesh, into a 300-ml Erlenmeyer flask, add 30 ml 60-percent $HClO_4$, and boil until the soil is white. Continue boiling 20 minutes longer to insure complete extraction. Soils high in organic matter should be pretreated with HNO_3 and HCl to destroy the readily oxidized organic matter.

Molybdovanadophosphoric acid colorimetry **6S1a**

Apparatus

Spectrophotometer.

Reagents

Solution I.—Dissolve 20 g ammonium molybdate ($(NH_4)_6Mo_7O_{24}\cdot 4H_2O$) in 250 ml water.

Solution II.—Dissolve 1.25 g ammonium metavanadate (NH_4VO_3) in 300 ml boiling water, cool, and add 425 ml 60-percent $HClO_4$. Mix solutions I and II and dilute to 1 liter in a volumetric flask. Store in a brown bottle.

Standard phosphorus solution.—Weigh out 0.2194 g ovendry KH_2PO_4 and dilute to 1 liter. This solution contains 50 ppm phosphorus.

Concentrated nitric acid (HNO_3) for samples high in organic matter only.

Concentrated hydrochloric acid (HCl) for samples high in organic matter only.

Procedure

Transfer the extract into 250-ml volumetric flasks, bring to volume, and let residue settle out. Pipet a 25-ml aliquot into a 50-ml volumetric flask, add 10 ml molybdo-vanadate reag nt, bring to volume, and mix.

After 10 minutes, the color is fully developed on most samples and can be read at 460 mμ. Prepare a standard curve covering the range 0 to 5 ppm phosphorus in 50 ml solution. Plot on semilog paper.

Calculations

$$\text{Total P (pct.)} = \frac{\text{ppm P from curve}}{400} \times \frac{250}{\text{ml aliquot}}$$

Comments

The color developed is molybdovanadophosphoric acid and is very stable, lasting 2 weeks or more.

To destroy organic matter in samples high in organic matter, add 15 ml HNO_3 and 5 ml HCl. When brown fumes stop coming off, add $HClO_4$ and follow the usual procedure.

Sediment disturbance during aliquot removal makes it impossible to take more than one aliquot a day. If more aliquots are necessary, remove the sediment by filtering the suspension into a 250-ml volumetric flask, using Whatman No. 50 filter paper.

Comparison of results by Na_2CO_3 fusion and by perchloric acid on lava samples indicate that extraction may not be complete for some silicate minerals. Extraction by $HClO_4$ should be complete on common phosphate minerals.

The volume of molybdo-vanadate reagent added is not critical but must be constant. The presence of chlorides slows down color development but does not interfere otherwise.

References

Sherman (1942), and Kitson and Mellons (1944), and Jackson (1956).

MINERALOGY

INSTRUMENTAL ANALYSIS 7A

Preparation 7A1

The treatment to be used in preparing samples depends on analysis objective and sample composition.

Carbonate removal 7A1a

Reagents

Sodium acetate (NaOAc), *N*, pH 5.0.

Procedure

Place 5 g soil in a 90-ml centrifuge tube, add 40 ml *N* NaOAc, pH 5.0, and heat at 95° C for 30 minutes, stirring occasionally. Centrifuge at 1,600 rpm for 5 minutes and decant supernatant liquid. Repeat if necessary until carbonates are removed. Wash twice with *N* NaOAc, pH 5.0. Save decantates for calcium and magnesium analysis. One washing is enough to prepare neutral or basic noncalcareous soils for optimum hydrogen peroxide treatment.

References

Jackson (1956).

Organic-matter removal 7A1b

Reagents

Hydrogen peroxide (H_2O_2), 30- to 35-percent.

Procedure

Transfer sample to a 250-ml tall breaker, using a minimum of water, and add 5 ml H_2O_2. When frothing subsides, heat at 90° C. Continue to watch for frothing. Add 5- to 10-ml aliquots of H_2O_2 each hour until 25 to 30 ml H_2O_2 has been used. Wash five times, removing water by filter candles. Transfer to a 90-ml centrifuge tube.

References

Kilmer and Alexander (1949).

Iron removal 7A1c

Reagents

Sodium bicarbonate ($NaHCO_3$), *N*.
Sodium citrate ($Na_3C_6H_5O_7$), 0.3*M*.
Sodium dithionite ($Na_2S_2O_4$) powder.

Procedure

If iron reduction is intended, add 5 ml *N* $NaHCO_3$ and as much as 40 ml 0.3*M* sodium citrate. Heat to 70° C (not above 80°) in a water bath and add 1 to 2 g $Na_2S_2O_4$, stir for 1 minute, and then stir intermittently for 15 minutes. Decant supernatant liquid and save for iron analysis. Repeat treatment as needed if soil is high in iron. Wash twice with 0.3*M* sodium citrate.

References

Aguilera and Jackson (1953) and Mehra and Jackson (1960).

Disaggregation and particle-size fractionation 7A1d

Reagents

Sodium bicarbonate ($NaHCO_3$), pH 9.5 to 10.0.

Sodium metaphosphate ($NaPO_3$).—Prepare as in 3A1.

Procedure

Use $NaHCO_3$ solution or sodium hexametaphosphate-sodium bicarbonate as a dispersing agent. Use hexametaphosphate carefully with amorphous materials since phosphates may be precipitated. A dilute HCl treatment may be useful for some highly allophanic soils. Do not use mechanical blenders for disaggregation if silt and sand are to be studied because they fracture large quartz grains. Separate sand from silt with a 300-mesh sieve and further separate the sands, using a nest of sieves (3A1). Separate clay ($<2\mu$) from silt by centrifuging at 750 rpm for 3 minutes (International No. 2 centrifuge with No. 240 head and solution depth of 10 cm). If silt and sand are to be studied, save these fractions in small vials after drying and weighing. If interested in separating fine clay ($<0.2\mu$) from the coarse clay (0.2μ to 2μ), centrifuge at 2,400 rpm for 30 minutes with a solution depth of 10 cm. Adjust time according to temperature. Add 50-ml aliquots of clay suspension after each centrifugation until the required amount of clay is obtained. Make each suspension of coarse and fine clay to known volume and determine its concentration and the concentration of the whole clay.

References

Kilmer and Alexander (1949) and Jackson (1956).

Particle-size distribution analysis (PSDA) pretreatment **7A1e**

Mineralogical analysis can be performed on samples from the particle-size distribution analysis (3A1). These samples have undergone peroxide digestion and sodium metaphosphate dispersion.

X-ray diffraction **7A2**

The minerals in soil clays of greatest interest are mostly flaky or platy, e.g., kaolinite, illite (mica), vermiculite, chlorite, and montmorillonite. They are most readily identified and distinguished from one another by observing the effect of different treatments on the interplanar spacings along the axis perpendicular to the platy surfaces. X-ray diffraction produces peaks on a chart corresponding to the various angles (2θ) of a goniometer from which the crystallographic spacing of the mineral or minerals can be calculated by Bragg's law. Tables of spacings corresponding to angles have been published in U.S. Geological Survey Circular 29 (Switzer et al. 1948).

The pretreatment used to distinguish montmorillonite from vermiculite and chlorite and to identify illite is saturation of the exchange complex of the clay with magnesium and treatment with ethylene glycol or glycerol. With this treatment, montmorillonite has a distinctive interplanar spacing of 17 Ångstroms (17 Å) to 19 Å. Chlorite and vermiculite keep a 14 Å spacing and mica a spacing of 10 Å. To distinguish vermiculite from chlorite and to identify kaolinite, which has a 7 Å spacing, the pretreatment consists of saturating the clay with potassium and heating on a glass slide at 500° C. Intermediate heat treatments, 110° and 250° C, can be used to study interlayering in the collapsing minerals or other special problems. After the 500° C treatment, vermiculite and montmorillonite collapse completely to 10 Å kaolinite becomes amorphous, and chlorite still shows 14 Å and sometimes 7 Å peaks. Interstratified forms of these minerals are indicated by spacings intermediate between those of the individual components.

Clay suspensions are dried as thin films so that the plates are parallel to one another (preferred orientation). This results in greater X-ray diffraction peak intensities. For identification and semiquantitative estimation of nonplaty minerals such as quartz, feldspars, and crystalline iron and aluminum oxides, randomly oriented dry-powder samples can be used. This dry-powder method was used for nearly all analysis, including clay fractions, before 1951.

Various techniques are used to prepare the ion-saturated clays and to improve their parallel orientation. Details can be obtained from the soil survey laboratories.

References

Brindley (1951), Brown (1961), Brunton (1955), Grim (1953), Jackson (1956), and Switzer et al. (1948).

Thin film on glass, solution pretreatment **7A2a**

Reagents

Potassium chloride (KCl), 1*N*.
Magnesium acetate ($Mg(OAC)_2$), 1*N*.
Magnesium chloride ($MgCl_2$), 1*N*.
Glycerol, 10-percent in ethanol by volume.

Procedure

Place an aliquot containing 50 mg clay in a 50-ml centrifuge tube. Add a few ml 1*N* KCl, centrifuge, and discard the clear supernatant. Combine sediments if necessary to get 50 mg in the tube. Wash four times by suspending and centrifuging in 20-ml portions *N* KCl. After the last washing with *N* KCl, wash with water until some of the clay remains suspended after centrifuging. Add a few drops of acetone or centrifuge at higher speed, or both, to flocculate the clay. Discard the supernatant. Clays are now free of chloride. Suspend the sediment in water and adjust the volume of the suspension to yield the desired weight of clay per slide. For most clays 50 mg per slide (27 by 46 mm) gives maximum intensity of reflection with minimum peeling of clay films. For amorphous clays, 25 mg per slide is adequate if glass slides are dried in a low-humidity atmosphere.

For magnesium saturation and glycerol solvation place an aliquot containing 100 mg clay in a 50-ml centrifuge tube. Wash twice with *N* $Mg(OAC)_2$ acetate and then three times with *N* $MgCl_2$. Wash the suspension free of chloride or until clay disperses. Place 2.5 ml clay suspension containing 50 mg clay on a glass slide (25 mg clay if the clay is amorphous). Solvate the remaining clay in the test tube with glycerol (about ½ ml of 10-percent glycerol in ethanol per 50 mg clay). Mix well and pipet 50 mg clay onto the glass slide. The slide should be moist but not wet. Or prepare the glycerol slide by adding 10-percent glycerol, a drop at a time, to the slides until the clay film is moist.

Thin film on glass, resin pretreatment **7A2b**

Reagents

Potassium-charged resin (Dowex 50W-X8).
Magnesium-charged resin (Dowex 50W-X8).
Glycerol, 10-percent in ethanol by volume.

Procedure

Add ¼ teaspoon K-charged resin to 50 mg clay in a 1 ml volume in a 50-ml centrifuge tube. Mix and transfer a 1-ml aliquot to a glass slide (27 by 46 mm). Take the aliquot from the top of the suspension to avoid removing the resin.

Magnesium-clay and Mg-glycerol-clay slides can be prepared using a Mg-charged cation exchange resin. Add ½ teaspoon Mg-charged resin to the

clay suspension (100 mg clay in a 4-ml volume) in a 50-ml centrifuge tube. Mix with the suspension, remove 1-ml aliquot, and place it on a glass slide. Add approximately ½ ml 10-percent glycerol in ethanol to the tube. Mix and transfer a 1-ml aliquot to a glass slide or use a Mg-clay slide for both Mg and Mg-glycerol solvated slides. Record a diffraction pattern for the Mg-saturated clay film. After solvating the clay film with 10-percent glycerol solution, record a second X-ray pattern.

References

Rex (1967).

Thin film on glass, sodium metaphosphate pretreatment **7A2c**

Shake soil overnight in sodium metaphosphate solution (3A2). Centrifuge to separate the clay or siphon off the clay. Pipet about 50 mg clay to a glass slide (47 by 26 mm). Concentrate the clay suspension if necessary. Scan the clay film at room temperature, again after glycerol solvation (7A2a), and finally after heating to 500° C. The clay film is Na^+ saturated. The sodium metaphosphate peaks do not interfere with peaks of the more common clay minerals in this quick check method.

Thin film on tile, solution pretreatment **7A2d**

Apparatus

Ceramic tile (porous precipate drying plate, sawed into 27- by 46- by 7-mm blocks).

Procedure

Prepare clay suspensions as in 7A2a except dry the suspensions on ceramic tile blocks. Clay suspensions dry in a few seconds on tile, preventing particle-size segregation. Partly immerse the Mg-saturated clay films in a 10-percent glycerol solution. The porous tile rapidly transfers the glycerol to the clay film. Blot off excess glycerol before recording the X-ray pattern.

Thin film on tile, resin pretreatment **7A2e**

Prepare clay suspensions as in 7A2b. Dry on ceramic tile blocks as in 7A2d. Solvate with glycer l as in 7A2d.

Thin film on tile, sodium metaphosphate pretreatment **7A2f**

Prepare the sample as in 7A2c. Pipet the clay onto ceramic tile blocks as in 7A2d. Follow method 7A2c for the other treatments. Or solvate with glycerol as in 7A2d.

Powder mount, diffractometer recording **7A2g**

Distinguishing dioctahedral and trioctahedral minerals requires random orientation of the sample. There is no completely satisfactory method for preparing a random mount, but several techniques are used.

Pack the sample in a box mount against a glass slide. When the box is full, tape the back of the box. Invert the box and remove the slide to expose the sample to X-rays. For more random packing, sprinkle the dry sample (ground to <100 mesh) on double stick tape fixed on a glass slide or on a thin film of Vaseline on a glass slide. Scan the sample by X-ray and measure the reflections with a geiger, proportional, or other counter.

Quick checks for whole samples, particularly for nonlayered minerals, can be made with a modified powder mount. Form the sample into a thick slurry, apply to a glass slide, and let dry This is for convenience rather than random orientation.

Powder mount, camera recording **7A2h**

Photographic plates are still the best means of identifying minerals. Mount the sample in the center of a circular X-ray camera. Record the X-ray reflections on photographic film placed in a cylindrical film holder inside the camera. All diffraction peaks are recorded simultaneously.

Differential thermal analysis **7A3**

Differential thermal analysis is a measurement of the difference in heat absorbed by or evolved from a sample and a thermally inert material as the two are heated at a constant rate. Thermocouples are arranged in wells in a metal block with one junction in a well for the unknown and one junction in another well in an inert material of similar composition. This assembly is placed in a well-insulated furnace. If a reaction occurs, a difference in temperature is registered on a strip-chart recorder or photographically. The magnitude of the difference depends on the nature of the reaction and amount of reacting substance in the unknown. The temperature at which the reaction occurs identifies the substance if enough is known about the sample to predict the possibilities.

The common endothermic reactions studied or recorded are loss of structural water in gibbsite, goethite, and kaolin and loss of carbon dioxide in carbonates. Change of state or rearrangement of crystal lattices can be either exothermic or endothermic. Oxidation reactions such as burning of carbon and oxidation of ferrous iron are exothermic.

Loss of water of constitution can be measured quantitatively by calibrating areas of peaks of known mixtures of standard minerals. This is done commonly to determine the percentage of kaolin and gibbsite in soils. The standard curves are prepared by running the known mixtures under the same conditions as the unknowns. Kaolin has an endotherm at 500° to 600° C and gibbsite at 310° C. Each worker should prepare his own standard curves.

Endotherms at about 120° C indicate surface-adsorbed water. Montmorillonite produces a double peak at a low temperature if saturated with a divalent cation. The proportion of this mineral can be estimated if samples are kept in an atmosphere with a high (70 to 80 percent) relative

humidity for 24 hours or more before analysis. Allophane has a broad endotherm at about 160° C.

Samples can be any well-powdered material—whole soil or separated fractions. Organic matter is objectionable because it produces irregular exothermic reactions that obscure the important peaks. If separated clay is used, it must be washed free of hygroscopic salts or salts containing water of crystallization.

References

Grim (1953) and McKenzie (1957).

OPTICAL ANALYSIS 7B

Grain studies 7B1

Sampling

For most work, such as checking discontinuities or estimating degree of weathering in different horizons, it is important to study the fractions that make up an appreciable quantitative part of the soil. One or two of the dominant fractions can be chosen after particle-size analysis. Because the subsample on a slide is small, the sample must be well mixed by stirring with a small flat-bladed implement. Steel needles or spatulas should not be used because they attract any magnetic minerals in the sample.

Separation by heavy liquids

To be able to study the less abundant minerals with a specific gravity of more than 2.8 or 2.9 with some confidence, concentrate them by specific-gravity separations in a heavy liquid such as acetylene tetrabromide or bromoform. These liquids can be diluted with toluene or other organic solvents to make separations in other density ranges to concentrate mica or calcic plagioclase. A very light liquid (<2.5) is useful to concentrate volcanic ash, plant opal, or sponge spicules. Static gravity alone is usually adequate to separate grains larger than 0.10 mm in separatory funnels or various kinds of tubes. Smaller grains require centrifuging. A pointed 15-ml centrifuge tube is generally satisfactory. A glass rod with a smooth bulb on the end can be used to close the end of the tube and the light minerals poured off. Or the contents of the lower part of the tube can be frozen to keep the heavy minerals in place.

Micas are difficult to separate because of their shape and because a little weathering, especially in biotite, decreases their specific gravity measurably. It is possible to use the differences in density to concentrate weathered biotite in various stages of alteration.

To be effectively separated by heavy liquids, the grains must be clean. Organic matter may prevent wetting and cause grains to clump or raft together. Light coatings may cause heavy grains to float and iron-oxide coatings may increase specific gravity. In some kinds of material, it is best to separate and weigh the magnetic fraction, either before or after the heavy-liquid separation. Wrapping a thin sheet of flexible plastic around the magnet helps make this separation quantitative.

Mounting the sample

Take enough sample with a microspatula to cover uniformly an area about 22 mm square on a slide. Add a few drops of water containing a little alcohol to reduce surface tension and spread the grains in the liquid with a pointed instrument so that no grains overlap or touch. When dry, check the spacing of the grains under the microscope and, if satisfactory, apply the mounting medium. A little gelatin or gum arabic added to the water fixes the grains more securely.

Of the several media used for permanent grain mounts, Canada balsam is the most generally used and is the best all-purpose medium. Its refractive index is close to that of quartz, which helps to distinguish quartz from other colorless minerals, particularly the feldspars. Other available commercial media cover the refractive index range of 1.53 to 1.55. Piperine [11] with a refractive index of 1.68, which is close to that of many of the common heavy minerals, is best for mounting them. Using immersion liquids of known refractive index has several advantages. Identification is easier because the refractive indices of minerals can be determined exactly. Permanent mounts may have all the prismatic or platy grains oriented in the preferred position. In oil the orientation of a grain can be changed by moving the cover slip.

Analysis

First survey the slide under a low-power objective to become familiar with the grain assemblage and to make a rough estimate of the relative abundance of minerals and other grains. Identify the most abundant minerals first; they probably are the easiest to identify and their elimination decreases the number of possibilities to consider when trying to identify the difficult ones. Furthermore, some mineral assemblages are likely in nature and others unlikely or almost impossible. A preliminary survey also gives clues to the minor species that can be expected. One ultimately learns to identify minerals by combining familiarity with a few striking features and a process of elimination. The identification procedures used are described in standard references on sedimentary petrography.

For many purposes listing the minerals is enough. It is easy to accompany such a list with an estimate of their relative abundance. To get volume percentages, minerals can be counted on arbitrarily and regularly spaced traverses. If the grains are large or sparsely distributed, all grains should be counted. If there are many small grains, all grains passed by a quadrant or all grains

[11] Available from pharmaceutical supply houses.

touched by the cross-hair intersect should be counted. If there are only a few species, counting 100 to 300 grains gives a good idea of the composition. As the number of species increases, the count should increase. It is seldom necessary to count more than 1,000 grains and in most work 500 to 600 is enough.

It is often important to record the morphology and condition of the different grains in the sand and silt fractions. Wear during transport shows as rounding, especially in chemically resistant minerals that do not have good cleavage such as quartz. Rounding can be observed nicely in crossed polarized light. A grain can have a round outline and still be a flat plate. If it is truly round, the interference colors rise smoothly, without steps or interruption, from low order at the periphery to high order in the thickest part.

Manifestations of weathering range from slight bleaching of color or slight lowering of refractive index to replacement of one mineral by another or c mplete removal of a species. Weathering in single grains is observed best in at least two mounting media. A medium whose refractive index closely matches that of a grain enables one to see the interior of the grain well and shows up contrasting coatings. A medium whose refractive index is a few hundredths of a unit away from that of the grain shows the condition of the grain surfaces.

Minerals modified by weathering, secondary minerals, aggregate grains, and other grains not identifiable as specific minerals are common in many soils and may be among the important characteristics of those soils. They should be described accurately even if they cannot be identified. The following list illustrates some kinds of aggregates that may be present in sand and silt fractions. They are in several categories of significance. Some are nuisances but must be accounted for and others have very real and important diagnostic value. Rock fragments include chips of shale, slate, schist, and fine-grained igneous rocks like rhyolite. Their identification depends on recognition of structure and individual components.

Clay aggregates may be present in many forms. Silt and sand bound together into larger grains by a nearly isotropic brownish material usually indicates faulty dispersion. Clay skins may resist dispersion and appear as fragments in grain mounts. Such fragments are usually brown or red and translucent and show wavy extinction bands; they have been mistaken for weathered biotite. Clay aggregates may be mineral pseudomorphs, e.g., kaolin pseudomorphs after feldspar and montmorillonite aggregates pseudomorphic after basic rock minerals. Montmorillonite in this form shows its high birefringence and its extinction is mottled or patchy on a small scale. Coarse kaolinite flakes, books, and vermicular aggregates resist dispersion and may be abundant in sand and silt. Such material may resemble muscovite but it is cloudy, shows no definite extinction, and has very low birefringence.

Allophane occurs in many soils derived from volcanic ash. It seldom can be identified directly, but it can be inferred if sand and silt are cemented into aggregates by isotropic material having a low refractive index, expecially if volcanic ash shards are also present.

Opal is another isotropic material; it occurs in separate grains, as a cementing material, and in organic forms (plant opal, sponge spicules, diatoms). Its refractive index is very low (<1.45), lower than that of volcanic ash. Identification may depend in part on its form and occurrence.

Iron oxides may occur separately or as cementing agents and in mixtures with other minerals. They impart brown and red colors and raise the refractive index of the mixtures. *Goethite* is yellow to bright red; the refractive index and birefringence are higher in the red varieties, which seem to be better crystallized. Goethite often has a prismatic or fibrous habit and aggregates have parallel extinction; in the more or less oriented aggregates the interference colors often have a greenish cast. *Hematite* has a higher refractive index than goethite and is granular rather than prismatic; large grains are nearly opaque.

Gibbsite often occurs as separate pure crystal aggregates either alone or inside altered mineral grains. The grains may seem to be well-crystallized single crystals, but close inspection in crossed polarized light shows patchy banded extinction, indicating intergrown aggregates. Gibbsite is colorless and its refractive index and birefringence are higher than those of quartz. Its bright interference colors and aggregate extinction are characteristic.

Chert occurs as aggregate grains with patchy extinction. Its refractive index is slightly lower that that of quartz and its birefringence lower than that of gibbsite. In some soils it occurs in forms pseudomorphic after fossils and in others in grains that have the exterior form of quartz crystals.

Glauconite occurs in the form of an aggregate of small micaceous grains having high birefringence. If fresh it is dark green and almost opaque, but it weathers to brown and more translucent forms. It is difficult to identify by optical evidence alone.

Titanium oxide aggregates have been tentatively identified in the heavy mineral separates of many soils. They have high refractive indices and birefringence, and their yellow to gray colors are similar to those of anatase. They are granular and rough surfaced, which suggests that they are secondary.

References

Cady (1965), Fry (1933), Krumbein and Pettijohn (1938), and Milner (1962).

Electron microscopy 7B2

Electron microscopy gives information on particle size and general morphology of clay-size particles. Evidence of clay formation or weathering can also be seen. Positive identification of halloysite often depends on observation of rolled structures under the electron microscope.

Procedure

Place a drop of dilute clay suspension on a 200-mesh copper grid. After drying, insert this grid in the microscope.

TOTAL ANALYSIS 7C

Chemical 7C1

The procedures follow the standard procedures for rock analysis set forth by Hillebrand and Lundell (1929) and modified by Robinson (1930) and by Shapiro and Brannock (1956).

X-ray emission spectrography 7C2

X-ray emission spectrography is elemental analysis by measuring the X-ray fluorescence produced by bombarding a sample with high-energy X-rays. Each element yields fluorescent radiation of unique wave lengths, one of which is selected for measurement by using an analyzing crystal that diffracts according to Bragg's law. The intensity of the fluorescent radiation is generally proportional to the amount of the element present, but this is affected by sample homogeneity, particle size, and the absorption and enhancement of radiation by any other elements present in the sample (matrix effects). These effects can be overcome or compensated for by (1) comparing the intensities with those of standards of similar composition prepared in a similar manner, (2) fusing both samples and standards in borax or lithium borate to eliminate particle-size effects and to reduce matrix effects, and (3) making matrix corrections by calculating the absorption-enhancement coefficient of the sample for the particular radiation being measured.

References

Vanden Heuvel (1965).

SURFACE AREA 7D

Glycerol retention 7D1

Apparatus

Weighing cans.

Reagents

Glycerol, 2-percent.

Procedure

Ovendry a clay sample (about 0.2 g) at 110° C for 2 hours. Cool and weigh. Add 5 ml 2-percent glycerol solution and mix. Heat in oven containing free glycerol at 110° C to constant weight. Record weight.

Calculations

To calculate the percent of glycerol retained subtract weight of ovendry sample from weight of glycerol and ovendry sample, divide by weight of ovendry sample, and multiply by 100. For the surface area of noncollapsible minerals (m^2/g), multiply glycerol retained by 19.1.

References

Kinter and Diamond (1958).

MISCELLANEOUS

SATURATED PASTE, MIXED 8A

Apparatus

Container of 500-ml capacity with lid such as a pint polyethylene refrigerator dish.

Procedure

Prepare saturated soil paste by adding water to a sample of soil and stirring with a spatula. From time to time tap the container on a workbench to consolidate the soil-water mixture. At saturation the soil paste glistens as it reflects light, flows slightly when the container is tipped, and slides freely and cleanly off the spatula except for soils containing much clay. Allow the sample to stand overnight and then recheck the preceding criteria for saturation. Free water should not collect on the soil surface nor should the paste stiffen markedly or lose its glistening appearance on standing. If this occurs, remix with more water.

Soils puddle most readily when worked at a moisture content near field capacity. Since minimum puddling is desired, add enough water initially to bring the sample nearly to saturation. If the paste is too wet, add more dry soil.

Size of the soil sample depends on the number of determinations to be made, i.e., on the volume of extract desired. A 400-g sample is convenient to handle and provides enough extract for most purposes. Mixing is generally easier if the soil is first airdried and passed through a 2-mm sieve.

Special precautions must be taken for peat and muck soils and soils of very fine texture. Dry peat and muck soils, especially if coarse-textured or woody, require overnight wetting to get a definite end point for the saturated paste. After the first wetting, pastes of these soils usually stiffen and lose their glisten on standing. Adding water and remixing usually gives a mixture that retains the characteristics of a saturated paste. To minimize puddling and thus obtain a more definite end point for fine-textured soils, add water with a minimum of stirring, especially in the early stages.

Ovendry a subsample at 110° C to determine moisture at saturation.

References

Richards (1954).

Saturation extract 8A1

Apparatus

Richards or Büchner funnels.
Filter rack or flask.
Filter paper.
Vacuum pump.
Extract containers such as test tubes or 1-oz bottles.

Procedure

Transfer the saturated soil paste to a filter funnel with a filter paper in place and apply vacuum until air begins to pass through the filter. Collect the extract in a bottle or test tube. If carbonate and bicarbonate are to be determined on the extract, add 1 drop of 1,000 ppm sodium hexametaphosphate solution for each 25 ml of extract to prevent precipitation of calcium carbonate on standing.

References

Richards (1954).

Conductivity of saturation extract 8A1a

Apparatus

Conductivity bridge.
Conductivity cell.

Procedure

Determine temperature of the saturation extract obtained by methods 8A1 or 8B1. Draw the extract into the cell and read the meter. Correct for temperature and cell constant using table 1 (table 15, Richards 1954) and report as electrical conductivity, mmhos per centimeter at 25° C. If the instrument fails to balance, dilute the extract 1:9 with distilled water and redetermine. The conductivity of the diluted extract is approximately one-tenth the conductivity of the saturation extract.

References

Richards (1954).

TABLE 1.—*Temperature factors (f_t) for correcting resistance and conductivity data on soil extracts to the standard temperature of 25° C.*

$EC_{25} = EC_t \times f_t$; $EC_{25} = (k/R_t) \times f_t$; $R_{25} = R_t/f_t$

°C.	°F.	f_t	°C.	°F.	f_t	°C.	°F.	f_t
3.0	37.4	1.709	22.0	71.6	1.064	29.0	84.2	0.925
4.0	39.2	1.660	22.2	72.0	1.060	29.2	84.6	.921
5.0	41.0	1.613	22.4	72.3	1.055	29.4	84.9	.918
6.0	42.8	1.569	22.6	72.7	1.051	29.6	85.3	.914
7.0	44.6	1.528	22.8	73.0	1.047	29.8	85.6	.911
8.0	46.4	1.488	23.0	73.4	1.043	30.0	86.0	.907
9.0	48.2	1.448	23.2	73.8	1.038	30.2	86.4	.904
10.0	50.0	1.411	23.4	74.1	1.034	30.4	86.7	.901
11.0	51.8	1.375	23.6	74.5	1.029	30.6	87.1	.897
12.0	53.6	1.341	23.8	74.8	1.025	30.8	87.4	.894
13.0	55.4	1.309	24.0	75.2	1.020	31.0	87.8	.890
14.0	57.2	1.277	24.2	75.6	1.016	31.2	88.2	.887
15.0	59.0	1.247	24.4	75.9	1.012	31.4	88.5	.884
16.0	60.8	1.218	24.6	76.3	1.008	31.6	88.9	.880
17.0	62.6	1.189	24.8	76.6	1.004	31.8	89.2	.877
18.0	64.4	1.163	25.0	77.0	1.000	32.0	89.6	.873
18.2	64.8	1.157	25.2	77.4	.996	32.2	90.0	.870
18.4	65.1	1.152	25.4	77.7	.992	32.4	90.3	.867
18.6	65.5	1.147	25.6	78.1	.988	32.6	90.7	.864
18.8	65.8	1.142	25.8	78.5	.983	32.8	91.0	.861
19.0	66.2	1.136	26.0	78.8	.979	33.0	91.4	.858
19.2	66.6	1.131	26.2	79.2	.975	34.0	93.2	.843
19.4	66.9	1.127	26.4	79.5	.971	35.0	95.0	.829
19.6	67.3	1.122	26.6	79.9	.967	36.0	96.8	.815
19.8	67.6	1.117	26.8	80.2	.964	37.0	98.6	.801
20.0	68.0	1.112	27.0	80.6	.960	38.0	100.2	.788
20.2	68.4	1.107	27.2	81.0	.956	39.0	102.2	.775
20.4	68.7	1.102	27.4	81.3	.953	40.0	104.0	.763
20.6	69.1	1.097	27.6	81.7	.950	41.0	105.8	.750
20.8	69.4	1.092	27.8	82.0	.947	42.0	107.6	.739
21.0	69.8	1.087	28.0	82.4	.943	43.0	109.4	.727
21.2	70.2	1.082	28.2	82.8	.940	44.0	111.2	.716
21.4	70.5	1.078	28.4	83.1	.936	45.0	113.0	.705
21.6	70.9	1.073	28.6	83.5	.932	46.0	114.8	.694
21.8	71.2	1.068	28.8	83.8	.929	47.0	116.6	.683

Conductivity of saturation extract (quick test) **8A1b**

Apparatus

Extractor, miniature Richards-type (fig. 10).
Conductivity cell, micropipet.
Filter paper, glass fiber, 3.0 cm.
Vacuum pump.

Procedure

Add 1 tablespoon soil to a 100-ml beaker or container. Make a saturated paste as in 8A. Place filter paper in recess of extractor and moisten with water. Insert the tip of the pipet conductivity cell through the other end of the extractor and into the paste. Apply suction to the cell until full. Proceed as in 8A1a.

Bureau of Soils cup, conductivity **8A2**

Apparatus.

Wheatstone bridge.
Bureau of Soils electrode cup.

Procedure

Rinse the soil cup with water, dry, and fill with soil paste (8A). Jar cup to remove air bubbles, strike off excess paste so the cup is level full, and connect cup to the bridge. Record resistance (ohms) and temperature of soil paste (°F).

Calculations

Convert resistance of the soil paste in ohms to percentage of soluble salt by using the tables and formulas on pages 346–349, Soil Survey Manual.

References

Richards (1954) and Soil Survey Staff (1951).

SATURATED PASTE, CAPILLARY RISE 8B

Apparatus

Sand table.
Mariotte bottle.
Filter paper.
Polyethylene dish with lid.

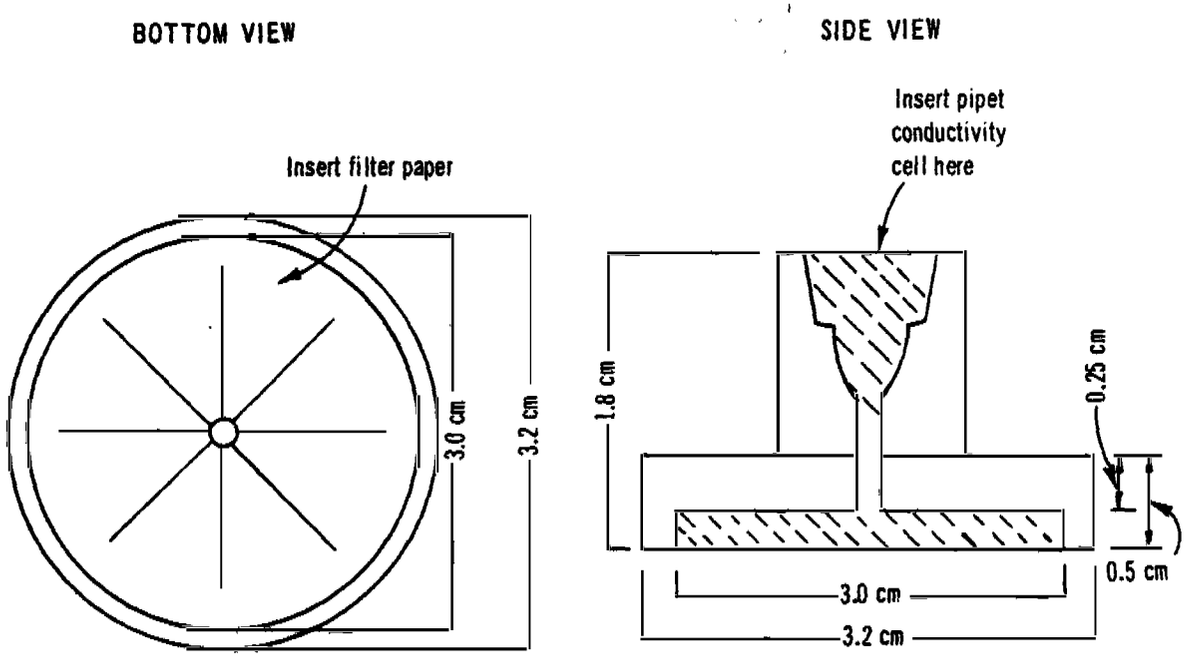

FIGURE 10.—Miniature Richards-type extractor made of polymethyl methacrylate (Lucite).

Procedure

Weigh 250 g airdry soil into cups made from Whatman No. 52 (15-cm) filter paper and place them on a sand table wetted at 5-cm tension with water. The sand table used consists of two nested plastic dishpans. The outer pan holds distilled water, which is kept at a constant level by a Mariotte bottle. The inner pan, containing medium to fine (35 to 80 mesh) pure quartz sand, rests on rubber stoppers and is suspended in the distilled water. Its perforated bottom is covered with a fine cloth-mesh screen that permits water to move upward by capillarity through the sand to the table surface. The sand on the table surface is then smoothed and covered with an absorbent paper towel. Lightweight porous firebricks can be used in place of the sand table.

Keep the samples on the sand table 16 to 18 hours, remove them, and weigh. Water adsorption drops rapidly after an initial wetting of 2 hours and the rate becomes very slow after 6 to 9 hours. Moisture moves toward the top and center of the sample, which is wetted last, insuring retention of soluble salts in the soil. Calculate moisture at saturation from the wet- and dry-soil weights, correcting for the wet and dry filter paper weights. Add airdry moisture percentage to moisture at saturati n and report on ovendry basis. After the wet weighing, transfer the sample to a pint polyethylene refrigerator dish, mix briefly with a spatula, and determine the pH. Keep a lid on the dish whenever possible to reduce evaporation.

References

Longenecker and Lyerly (1964).

Saturation extract **8B1**

Proceed as in 8A1, using the saturated paste obtained by method 8B.

Conductivity of saturation extract **8B1a**

Proceed as in method 8A1a except use saturation extract obtained by method 8B1.

REACTION (pH) **8C**

Soil suspensions **8C1**

Water dilution **8C1a**

Procedure

For 1:1 dilution add an equal weight of water to 20 or 30 g soil in a 50-ml beaker or paper cup. Stir at regular intervals for about an hour. Measure pH of the soil suspension with a glass electrode, stirring well just before immersing the electrodes in the suspension. For other dilutions vary the amount of soil, keeping the volume of water constant.

Saturated paste **8C1b**

Procedure

Immerse electrodes in the saturated paste prepared by method 8A or 8B.

KCl **8C1c**

Procedure

Proceed as in method 8C1a except use *N* KCl instead of water.

NaF **8C1d**

Reagents

Sodium fluoride (NaF), 1*N* (saturated). Add 1,000 ml water to 50 g NaF in a 1-liter plastic bottle. Let stand for 2 days but shake occasionally. On the third day, after excess NaF has settled, measure 50 ml of the solution into a beaker. The pH should be between 7.2 and 8.1. Add 3 to 5 drops 0.25-percent phenolphthalein and titrate with 0.01*N* NaOH to a pink end point (pH 8.2 to 8.3). If the solution has a pH of more than 8.2 or if the titratable acidity exceeds 0.25 meq per liter, try another source of NaF.

Apparatus

pH meter.
Stopwatch or watch with minute sweep hand.

Procedure

Place 1 g airdry soil in a 100-ml beaker. Add 50 ml 1*N* NaF. Record the time. Stir the suspension for 1 minute. Place the glass and reference electrodes in the upper third of the suspension. Stir for 1 minute and read the pH exactly 2 minutes after adding the NaF solution. After 60 minutes, stir the suspension briefly and again read the pH.

References

Fields and Parrott (1966).

$CaCl_2$ **8C1e**

Proceed as in 8C1a except use 0.01 *M* $CaCl_2$. This procedure can be combined with 8C1a by adding an equal volume of 0.02 *M* $CaCl_2$ to the soil suspension prepared for the water pH. Stir twice at 15-minute intervals before reading. The soil-solution ratio will be 1:2, but the pH difference between 1:1 and 1:2 suspensions is negligible.

References

Schofield and Taylor (1955) and Peech (1965).

RATIOS AND ESTIMATES 8D

To total clay **8D1**

Divide cation-exchange capacity, extractable iron, or 15-bar water retention by the total clay percentage. In the past, these ratios have been reported as grams per gram of clay (iron) or milliequivalents per gram of clay (*CEC*).

To noncarbonate clay **8D2**

Divide cation-exchange capacity, extractable iron, or 15-bar water retention by the noncarbonate clay percentage determined by subtracting the carbonate clay from total clay.

Calcium to magnesium (extractable) **8D3**

Divide extractable calcium by extractable magnesium.

Estimated clay percentage **8D4**

For most soils, clay percentage can be approximated as 2.5 times the 15-bar water percentage. Use caution in applying this factor to any particular situation, especially where organic matter or amorphous material is present in significant quantities.

Estimated total salt **8D5**

Estimate total salt from the conductivity of the saturation extract by using charts and graphs available in Richards (1954). The essential relations are summarized in the following equations:

$$\log \text{total salt (ppm)} = 1.81 + 1.1 \log \text{EC(mmho/cm)} + \log \text{saturation percentage}$$

$$\text{total salt (pct)} = \text{total salt (ppm)} \times 10^{-4}$$

References

Richards (1954).

SOIL RESISTIVITY 8E

Saturated paste **8E1**

Convert measured resistance obtained by 8A2 to specific resistance at 60° F. using table 2 (table 16, Richards 1954).

TABLE 2.—*Bureau of Soils data for reducing soil paste resistance readings to values at 60° F. (Whitney nd Means, 1897)*[1]

° F.	Ohms								
	1,000	2,000	3,000	4,000	5,000	6,000	7,000	8,000	9,000
40	735	1, 470	2, 205	2, 940	3, 675	4, 410	5, 145	5, 880	6, 615
42	763	1, 526	2, 289	3, 052	3, 815	4, 578	5, 341	6, 104	6, 867
44	788	1, 576	2, 364	3, 152	3, 940	4, 728	5, 516	6, 304	7, 092
46	814	1, 628	2, 442	3, 256	4, 070	4, 884	5, 698	6, 512	7, 326
48	843	1, 686	2, 529	3, 372	4, 215	5, 058	5, 901	6, 744	7, 587
50	867	1, 734	2, 601	3, 468	4, 335	5, 202	6, 069	6, 936	7, 803
52	893	1, 786	2, 679	3, 572	4, 465	5, 358	6, 251	7, 114	8, 037
54	917	1, 834	2, 751	3, 668	4, 585	5, 502	6, 419	7, 336	8, 253
56	947	1, 894	2, 841	3, 780	4, 735	5, 682	6, 629	7, 576	8, 523
58	974	1, 948	2, 922	3, 896	4, 870	5, 844	6, 818	7, 792	8, 766
60	1, 000	2, 000	3, 000	4, 000	5, 000	6, 000	7, 000	8, 000	9, 000
62	1, 027	2, 054	3, 081	4, 108	5, 135	6, 162	7, 189	8, 216	9, 243
64	1, 054	2, 108	3, 162	4, 216	5, 270	6, 324	7, 378	8, 432	9, 486
66	1, 081	2, 162	3, 243	4, 324	5, 405	6, 486	7, 567	8, 648	9, 729
68	1, 110	2, 220	3, 330	4, 440	5, 550	6, 660	7, 770	8, 880	9, 990
70	1, 140	2, 280	3, 420	4, 560	5, 700	6, 840	7, 980	9, 120	10, 260
72	1, 170	2, 340	3, 510	4, 680	5, 850	7, 020	8, 190	9, 360	10, 530
74	1, 201	2, 402	3, 603	4, 804	6, 005	7, 206	8, 407	9, 608	10, 809
76	1, 230	2, 460	3, 690	4, 920	6, 150	7, 380	8, 610	9, 840	11, 070
78	1, 261	2, 522	3, 783	5, 044	6, 305	7, 566	8, 827	10, 088	11, 349
80	1, 294	2, 598	3, 882	5, 176	6, 470	7, 764	9, 058	10, 352	11, 646
82	1, 327	2, 654	3, 981	5, 308	6, 635	7, 962	9, 289	10, 616	11, 943
84	1, 359	2, 718	4, 077	5, 436	6, 795	8, 154	9, 513	10, 872	12, 231
86	1, 393	2, 786	4, 179	5, 572	6, 965	8, 358	9, 751	11, 144	12, 537
88	1, 427	2, 854	4, 281	5, 708	7, 135	8, 562	9, 989	11, 416	12, 843
90	1, 460	2, 920	4, 380	5, 840	7, 300	8, 760	10, 220	11, 680	13, 140
92	1, 495	2, 990	4, 485	5, 980	7, 475	8, 970	10, 465	11, 960	13, 455
94	1, 532	3, 064	4, 596	6, 128	7, 660	9, 192	10, 724	12, 256	13, 788
96	1, 570	3, 140	4, 710	6, 280	7, 850	9, 420	10, 990	12, 560	14, 130
98	1, 611	3, 222	4, 833	6, 444	8, 055	9, 666	11, 277	12, 888	14, 499

[1] Example: Suppose the observed resistance is 2,568 ohms at 50° F. In the table at that temperature, we find that 2,000 ohms is equal to 1,734 ohms at 60° F., 5,000 ohms is equal to 4,335 ohms at 60° F., hence 500 ohms would be equal to 434 ohms. Similarly, 60 ohms would be one-hundredth of 6,000 ohms in the table and therefore equal to approximately 52 ohms at 60° F., while 8 ohms would be equal to about 7 ohms. These separate values are added together thus,

2,000	1,734
500	434
60	52
8	7

2,568 ohms at 50° = 2,227 ohms at 60°

LITERATURE CITED

Aguilera, N. H., and M. L. Jackson. 1953. Iron oxide removal from soils and clays. Soil Sci. Soc. Amer. Proc. 17: 359–364.

Allison, L. E. 1960. Wet combustion apparatus and procedure for organic and inorganic carbon in soil. Soil Sci. Soc. Amer. Proc. 24: 36–40.

American Society for Testing and Materials. 1970. Book of ASTM standards, pp. 212–219.

Association of Official Agricultural Chemists. 1945. Official and tentative methods of analysis, 6th ed. 932 pp. Washington, D.C.

Barrows, H. L., and E. C. Simpson. 1962. An EDTA method for the direct routine determination of calcium and magnesium in soils and plant tissue. Soil Sci. Soc. Amer. Proc. 26: 443–445.

Bascomb, C. L. 1968. Distribution of pyrophosphate-extractable iron and organic carbon in soils of various groups. J. Soil Sci. 19: 251–268.

Bower, C. A., and L. V. Wilcox. 1965. Soluable salts. *In* Methods of soil analysis, Monog. 9. v. 2, pp. 933–951. Amer. Soc. Agron., Madison, Wis.

Brasher, B. R., D. P. Franzmeier, V. T. Valassis, and S. E. Davidson. 1966. Use of Saran resin to coat natural soil clods for bulk-density and water-retention measurements. Soil Sci. 101: 108.

Brindley, G. W., ed. 1951. X-ray identification and crystal structures of clay minerals. 345 pp. Mineralogical Society, London.

Brown, G., ed. 1961. The X-ray identification and crystal structures of clay minerals. 544 pp. Mineralogical Society (Clay Minerals Group), London.

Bruton, G. 1955. Vapor pressure glycolation of oriented clay minerals. Amer. Min. 40: 124–126.

Cady, J. G. 1965. Petrographic microscope techniques. *In* Methods of soil analysis, Monog. 9. v. 2, pp. 604–631. Amer. Soc. Agron., Madison, Wis.

Chapman, H. D., and P. F. Pratt. 1961. Methods of analysis for soils, plants, and waters. Univ. of Calif., Div. of Agr. Sci. 309 pp.

Chenery, E. M. 1948. Thioglycollic acid as an inhibitor for iron in the colorimetric determination of aluminum by means of aluminon. Analyst 73: 501–502.

Cheng, K. L., and R. H. Bray. 1951. Determination of calcium and magnesium in soil and plant material. Soil Sci. 72: 449–458.

——— R. H. Bray, and T. Kurtz. 1953. Determination of total iron in soils by disodium dihydrogen ethylenediaminetetraacetate titration. Anal. Chem. 25: 347–348.

Erickson, A. E., L. C. Li, and J. E. Gieseking. 1947. A convenient method for estimating carbonates in soils and related materials. Soil Sci. 63: 451–454.

Fieldes, M., P. J. T. King, J. P. Richardson, and L. D. Swindale. 1951. Estimation of exchangeable cations in soils with the Beckman flame spectrophotometer. Soil Sci. 72: 219–232.

——— and K. W. Parrott. 1966. The nature of allophane in soils. III. Rapid field and laboratory test for allophane. New Zealand J. Sci. 9: 623–629.

Franzmeier, D. P., B. F. Hajek, and C. H. Simonson. 1965. Use of amorphous material to identify spodic horizons, Soil Sci. Soc. Amer. Proc. 29: 737–743.

——— and S. J. Ross, Jr. 1968. Soil swelling: Laboratory measurement and relation to other soil properties. Soil Sci. Soc. Amer. Proc. 32: 573–577.

Fry, W. H. 1933. Petrographic methods for soil laboratories. U.S. Dept. Agr. Tech. Bull. 344. 96 pp.

Grim, R. E., 1953. Clay mineralogy. 384 pp. McGraw-Hill, New York.

Grossman, R. B. 1964. Composite thin sections for estimation of clay-film volume. Soil Sci. Soc. Amer. Proc. 28: 132–133.

——— B. R. Brasher, D. P. Franzmeier, and J. L. Walker. 1968. Linear extensibility as calculated from natural-clod bulk density measurements. Soil Sci. Soc. Amer. Proc. 32: 570–573.

——— and J. L. Millet. 1961. Carbonate removal from soils by a modification of the acetate buffer method. Soil Sci. Soc. Amer. Proc. 25: 325–326.

Hillebrand, W. F., and G. E. F. Lundell. 1929. Applied inorganic analysis, with special reference to the analysis of metals, minerals and rocks. 929 pp. John Wiley and Sons, New York.

Holmgren, George G. S. 1967. A rapid citrate-dithionite extractable iron procedure. Soil Sci. Soc. Amer. Proc. 31: 210–211.

——— 1968. Nomographic calculation of linear extensibility in soils containing coarse fragments. Soil Sci. Soc. Amer. Proc. 32: 568–570.

Hsu, P. H. 1963. Effect of initial pH, phosphate, and silicate on the determination of aluminum with aluminon. Soil Sci. 96: 230–238.

Jackson, M. L. 1956. Soil chemical analysis, advanced course. 991 pp. Privately published, Madison, Wis.

——— 1958. Soil chemical analysis. 498 pp. Prentice-Hall, Inc., Englewood Cliffs, N.J.

Johnson, C. M., and A. Ulrich. 1959. Calif. Agr. Exp. Sta. Bull. No. 766. 78 pp.

Kilmer, V. J. 1960. The estimation of free iron oxides in soils. Soil Sci. Soc. Amer. Proc. 24: 420–421.

——— and L. T. Alexander. 1949. Methods of making mechanical analyses of soils. Soil Sci. 68: 15–24.

——— and J. F. Mullins. 1954. Improved stirring and pipetting apparatus for mechanical analysis for soils. Soil Sci. 77: 437–441.

——— and D. C. Nearpass. 1960. The determination of available sulfur in soils. Soil Sci. Soc. Amer. Proc. 24: 337–339.

Kinter, Earl B., and Sidney Diamond. 1958. Gravimetric determination of monolayer-glycerol complexes of clay minerals. Proc. 5th Natl. Conf. on Clays and Clay Minerals, Natl. Acad. Sci.-Natl. Res. Council Publ. 566, pp. 318–333.

Kitson, R. E., and M. E. Mellons. 1944. Colorimetric determination of phosphorus as molybdivanadophosphoric acids. Indus. and Engr. Chem. 16: 379.

Krumbein, W. C., and F. J. Pettijohn. 1938. Manual of sedimentary petrography. 549 pp. D. Appleton-Century Co., New York.

Lagerwerff, J. V., G. W. Akin, and S. W. Moses. 1965. Detection and determination of gypsum in soils. Soil Sci. Soc. Amer. Proc. 29: 535–540.

Lin, Clara, and N. T. Coleman. 1960. The measurement of exchangeable aluminum in soils and clays. Soil Sci. Soc. Amer. Proc. 24: 444–446.

Lockwood, W. N. 1950. Impregnating sandstone specimens with thermosetting plastics for studies of oil-bearing formations. Bull. Amer. Assoc. Petrol. Geol. 34: 2061–2067.

Longenecker, D. E., and P. J. Lyerly. 1964. Making soil pastes for salinity analysis: a reproducible capillary procedure. Soil Sci. 97: 268–275.

McKenzie, R. C. 1957. The differential thermal investigation of clays. Mineralogical Society, London.

McKeague, J. A., and J. H. Day. 1966. Dithionite- and oxalate-extractable Fe and Al as aids in differentiating various classes of soils. Can. J. Soil Sci. 46: 13–22.

Mehra, O. P., and M. L. Jackson. 1960. Iron oxide removal from soils and clays by a dithionite-citrate system buffered with sodium bicarbonate. Proc. 7th Natl. Conf. on Clays and Clay Minerals, pp. 317–327. Permagon Press, New York.

Milner, H. B. 1962. Sedimentary petrography, 4th ed. v. 2, pp. 643 and 715. Macmillan Co., New York.

Nelson, R. E. 1970. Semimicro determination of sulfate in water extracts of soils. Soil Sci. Soc. Amer. Proc. 34: 343–345.

Peech, M. 1965. Lime requirement. *In* Methods of soil analysis. Monog. 9. v. 2, pp. 927–932. Amer. Soc. Agron., Madison, Wis.

——— L. T. Alexander, L. A. Dean, and J. F. Reed. 1947. Methods of soil analysis for soil fertility investigations. U.S. Dept. Agr. C. 757, 25 pp.

Pierce, W. C., and E. L. Haenisch. 1955. Quantitative analysis, pp. 141–143. John Wiley and Sons, New York.

Pratt, P. F., and F. L. Bair. 1961. A comparison of three reagents for the extraction of aluminum from soils. Soil Sci. 91: 357–359.

Reed, F. S., and J. L. Mergner. 1953. The preparation of rock thin sections. Amer. Miner. 38: 1184–1203.

North-Central Regional Research Committee on Soils. 1955. Loess-derived gray-brown podzolic soils in the Upper Mississippi River Valley. Univ. of Ill. Bull. 587, 80 pp.

Rennie, P. J. 1957. Routine determination of the solids, water, and air volumes within soil clods of natural structure. Soil Sci. 84: 351–365.

Richards, L. A., ed. 1954. Diagnosis and improvement of saline and alkali soils. U.S. Salinity Laboratory, U.S. Dept. Agr. Hbk. 60, 160 pp.

Robinson, W. O. 1930. Method and procedure of soil analysis used in the division of soil chemistry and physics. U.S. Dept. Agr. C. 139, 19 pp.

Rogers, A. F., and P. F. Kerr. 1933. Thin-section mineralogy. McGraw-Hill Book Co., New York.

Schofield, R. K., and A. W. Taylor. 1955. The measurement of soil pH. Soil Sci. Soc. Amer. Proc. 19: 164–167.

Shapiro, L., and W. W. Brannock. 1956. Rapid analysis of silicate rocks. U.S. Geol. Survey Bull. 1036–C: 19–56.

Sherman, Mildred S. 1942. Colorimetric determination of phosphorus in soils. Indus. and Engr. Chem. 14: 182.

Shields, L. G., and M. W. Meyer. 1964. Carbonate clay: measurement and relationship to clay distribution and cation exchange capacity. Soil Sci. Soc. Amer. Proc. 28: 416–419.

Soil Survey Staff. 1951. Soil Survey Manual. U.S. Dept. Agr. Hbk. 18, 503 pp.

Switzer, G., J. M. Axelrod, M. L. Lindberg, and E. S. Larson. 1948. Tables of d spacings for angle 2θ. U.S. Geol. Survey C. 29.

Treadwell, F. P., and W. B. Hall. 1943. Analytical Chemistry, Vol. 1: Qualitative analysis, 9th ed. John Wiley and Sons, New York.

Tucker, B. M. 1954. The determination of exchangeable calcium and magnesium in carbonate soils. Austral. J. Agr. Res. 5: 706–715.

Tyner, E. H. 1939. The use of sodium metaphosphate for dispersion of soils for mechanical analysis. Soil Sci. Soc. Amer. Proc. 4: 106–113.

Vanden Heuvel, R. C. 1965. Elemental analysis by X-ray emission spectrography. *In* Methods of soil analysis. Monog. 9. v. 2, pp. 771–821. Amer. Soc. Agron. Madison, Wis.

Walkley, A. 1935. An examination of methods for determining organic carbon and nitrogen in soils. J. Agr. Sci. 25: 598–609.

Washington, H. S. 1930. The chemical analysis of rocks, 4th ed. pp. 168–172. John Wiley and Sons, New York.

Williams, D. E. 1948. A rapid manometric method for the determination of carbonate in soils. Soil Sci. Soc. Amer. Proc. 13: 127–129.

Yoe, J. H., and W. L. Hill. 1927. An investigation of the reaction of aluminum with the ammonium salt of aurinetri-carboxylic acid under different experimental conditions, and its application to the colorimetric determination of aluminum in water. J. Amer. Chem. Soc. 49: 2395–2407.

Young, K. K. 1962. A method of making moisture desorption measurements on undisturbed soil samples. Soil Sci. Soc. Amer. Proc. 26: 301.

——— and J. D. Dixon. 1966. Overestimation of water content at field capacity from sieved-sample data. Soil Sci. 101: 104–107.

Yuan, T. L. 1959. Determination of exchangeable hydrogen in soils by a titration method. Soil Sci. 88: 164–167.

Yuen, S. H., and A. G. Pollard. 1952. The determination of nitrogen in agricultural materials by the Nessler reagent. I, preparation of the reagent. J. Sci. Food and Agr. 3: 441–447.