WASHINGTON STANDARD DRAWING	BIOENGINEERING BANK PROTECTION STRAIGHT LOG WEIR	STANDARD DRAWING NO. BIO–0055 APPROVED BY: LAJ DRAWN BY: KLY ISSUE DATE: 2/99

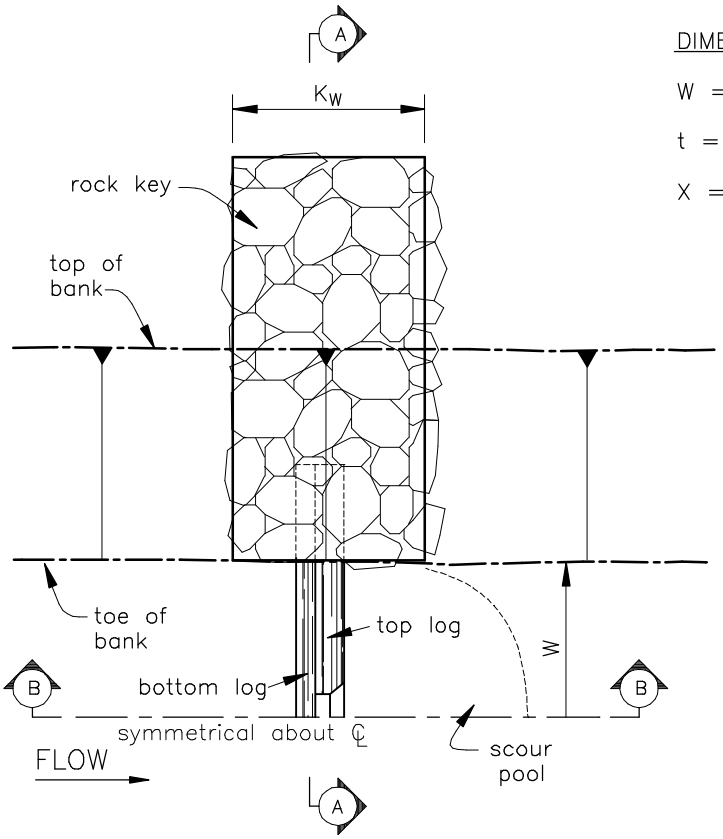

PLAN VIEW

DIMENSIONS

W = _____ (ft) elev A _____

t = _____ (ft) K_D = _____ (ft)

X = _____ K_W = _____ (ft)

ROCK KEY GRADATION

D_{100} = _____ min (in) _____ max (in)

D_{75} = _____ min (in) _____ max (in)

D_{50} = _____ min (in) _____ max (in)

D_{min} = _____ min (in) _____ max (in)

LOG DIMENSIONS

Species _____

TOP LOG

L_T (length) _____ min (ft) _____ max (ft)

L_E (embedded) _____ min (ft) _____ max (ft)

Dia. = _____ min (in) _____ max (in)

BOTTOM LOG

L_B (length) _____ min (ft) _____ max (ft)

L_E (embedded) _____ min (ft) _____ max (ft)

Dia. = _____ min (in) _____ max (in)

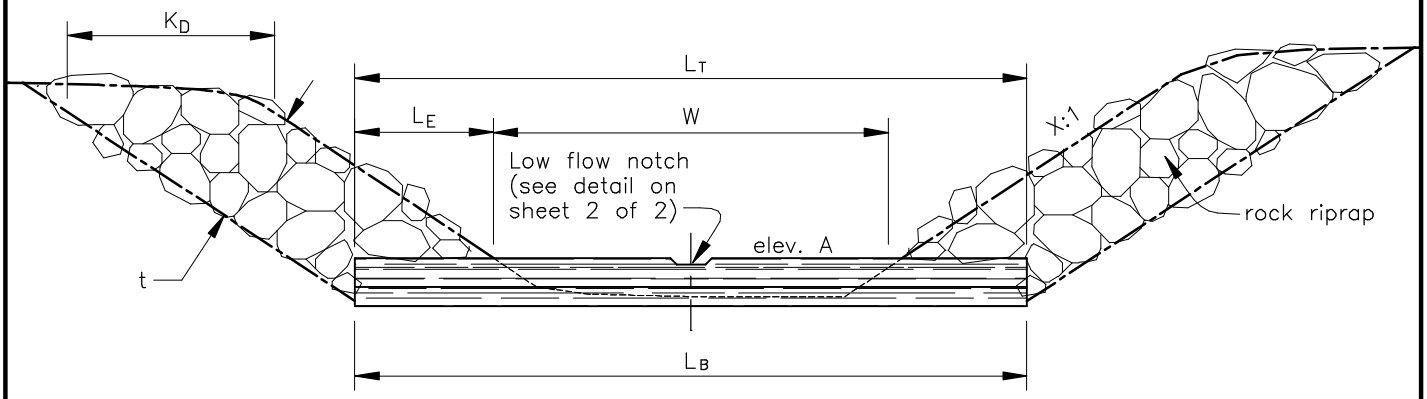

SECTION (A)

drawing not to scale

	JOB CLASS	Date
	CAD FILE NO. sht 1 of 2 BIO–0055.DWG	Designed _____
		Drawn _____
	SHEET OF	Checked _____
U.S.D.A. NATURAL RESOURCES CONSERVATION SERVICE		Approved _____

WASHINGTON STANDARD DRAWING	BIOENGINEERING BANK PROTECTION STRAIGHT LOG WEIR	STANDARD DRAWING NO. BIO–0055 APPROVED BY: LAJ DRAWN BY: KLY ISSUE DATE: 2/99

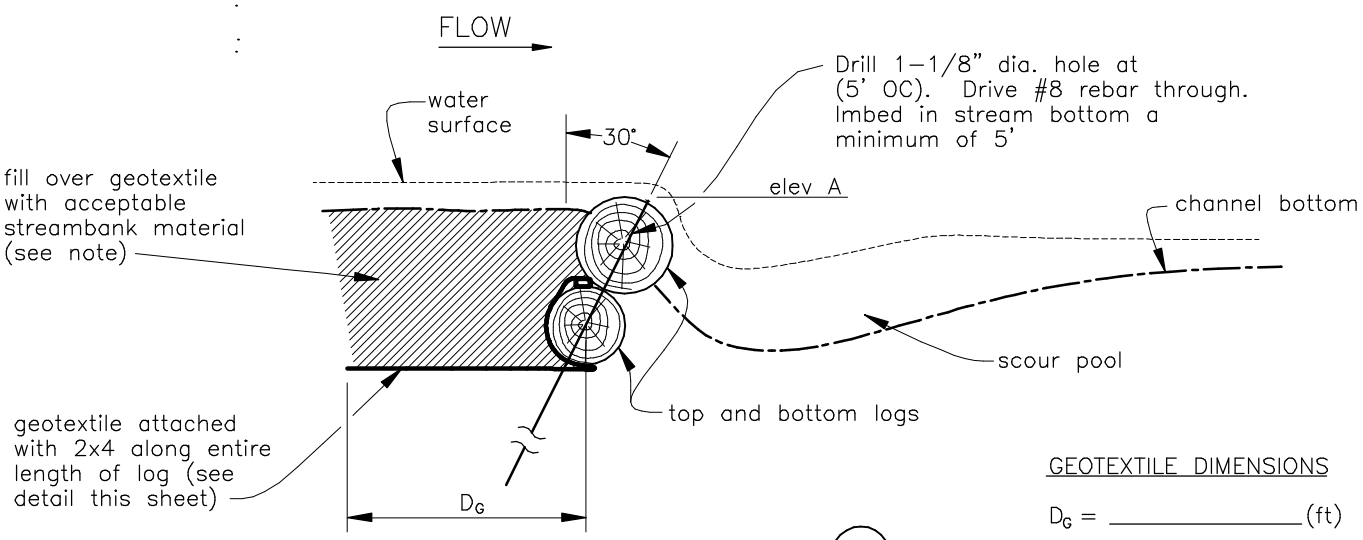

GEOTEXTILE DIMENSIONS

D_G = _____ (ft)

SECTION B

GENERAL NOTES

1. This standard drawing requires supporting technical documentation prior to use and must be adapted to the specific site.

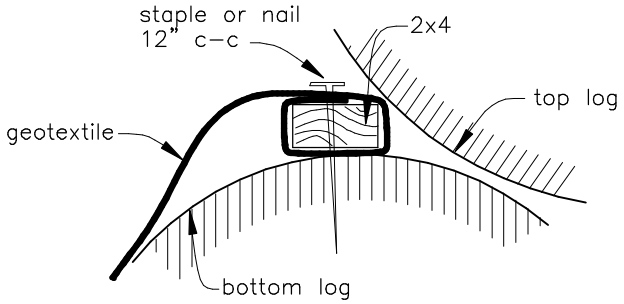

ATTACHMENT DETAIL

DIMENSIONS

N_W = _____ (in)

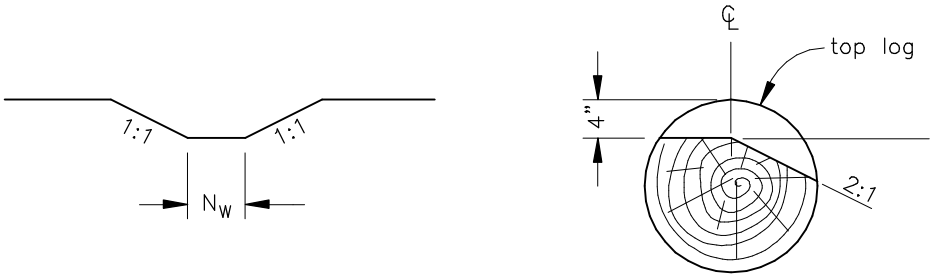

LOW FLOW NOTCH DETAILS

drawing not to scale

	JOB CLASS	Date
	CAD FILE NO. sht 2 of 2 BIO–0055.DWG	Designed _____ _____ Drawn _____ _____
	SHEET OF	Checked _____ _____
U.S.D.A. NATURAL RESOURCES CONSERVATION SERVICE		Approved _____ _____