WASHINGTON STANDARD DRAWING	DRAINAGE TRENCHING FOR FLEXIBLE CONDUIT	STANDARD DRAWING NO. DRN–0003 APPROVED BY: LAJ DRAWN BY: KLY ISSUE DATE: 5/01

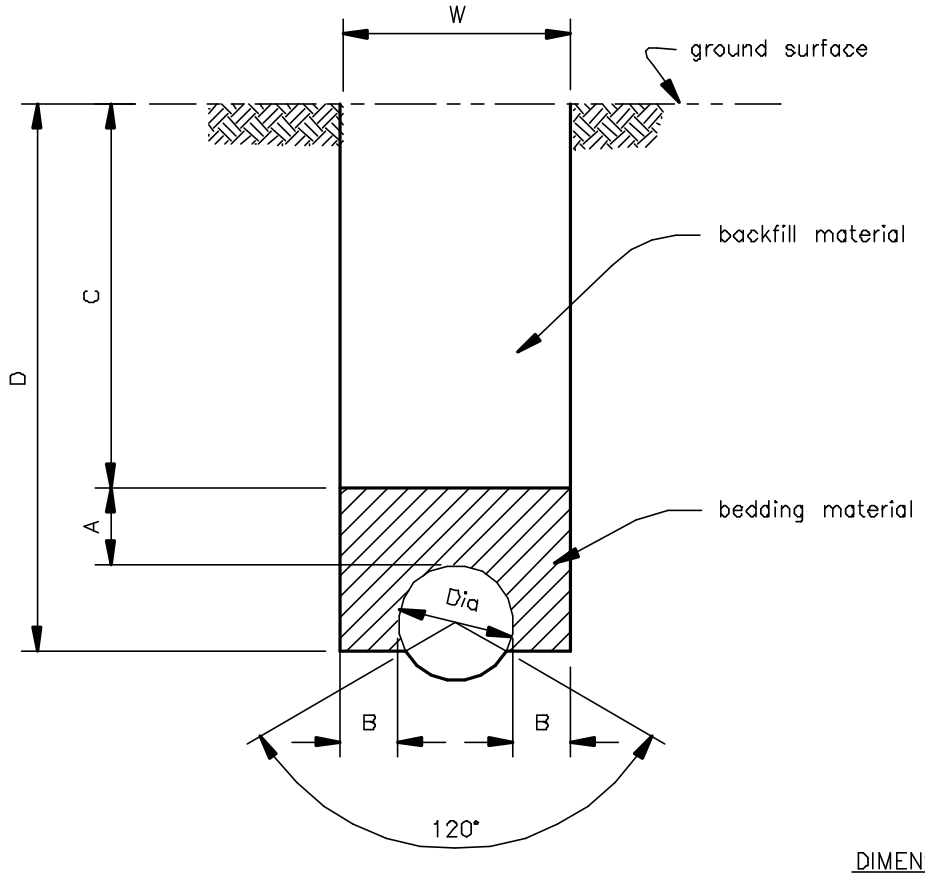

SEMI–CIRCULAR GROOVE

DIMENSIONS

Dia = _____(in)

A = _____(in)

B = _____(in)

C = _____(in)

D = _____(in)

W = _____(in)

ROCK GRADATION

D_{100} = _____min (in)_____max (in)

D_{75} = _____min (in)_____max (in)

D_{50} = _____min (in)_____max (in)

D_{min} = _____min (in)_____max (in)

NOTE:
This standard drawing requires supporting technical documentation prior to use and must be adapted to the specific site.

Drawing not to scale.

	JOB CLASS		Date
	CAD FILE NO. DRN–0003.DWG	Designed	
		Drawn	
	SHEET OF	Checked	
U.S.D.A. NATURAL RESOURCES CONSERVATION SERVICE		Approved	