WASHINGTON STANDARD DRAWING	LIVESTOCK FACILITIES CHAIN LINK FENCE POSTS	STANDARD DRAWING NO. LSK–0051 APPROVED BY: GBR DRAWN BY: KLY ISSUE DATE: 4/00

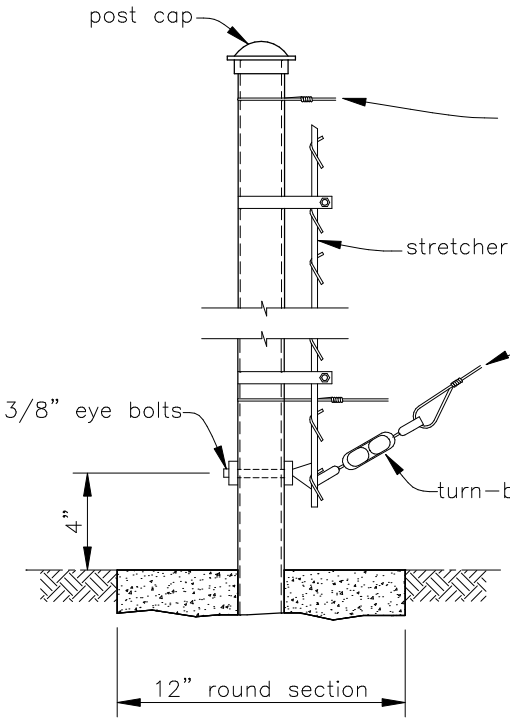

END POST
GATE POST
CORNER POST

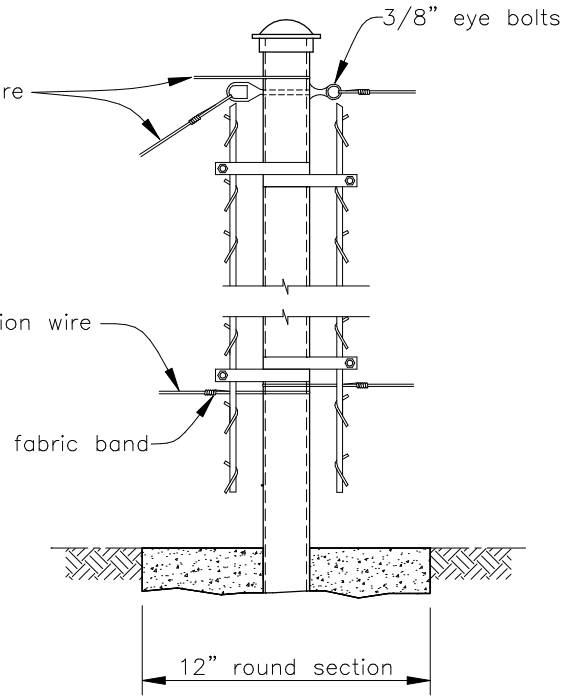

PULL POST

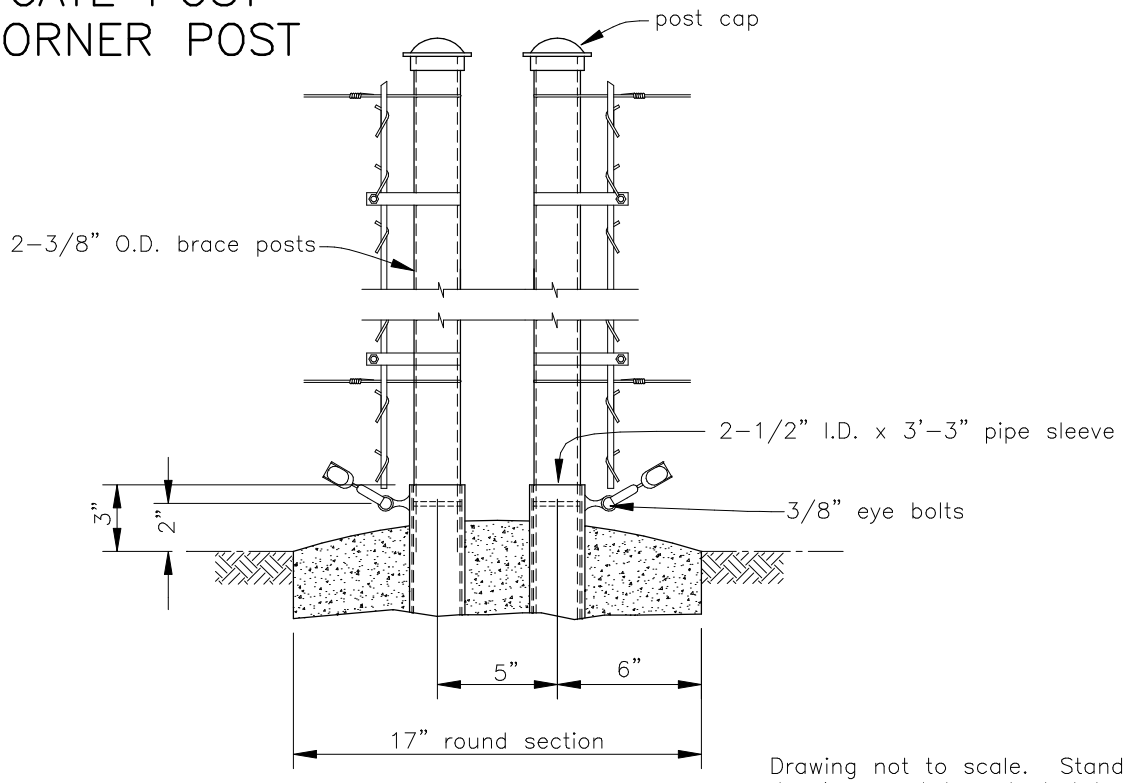

BRACE POST DETAIL

Drawing not to scale. Standardized drawing must be adapted to the specific site.

	JOB CLASS	Designed	Date
	CAD FILE NO. LSK–0051.DWG	Drawn	
	SHEET OF	Checked	
U.S.D.A. NATURAL RESOURCES CONSERVATION SERVICE		Approved	