WASHINGTON STANDARD DRAWING	LIVESTOCK FACILITIES **WOVEN WIRE FENCE BRACES**	STANDARD DRAWING NO. **LSK–0254** APPROVED BY: GBR DRAWN BY: KLY ISSUE DATE: 5/01

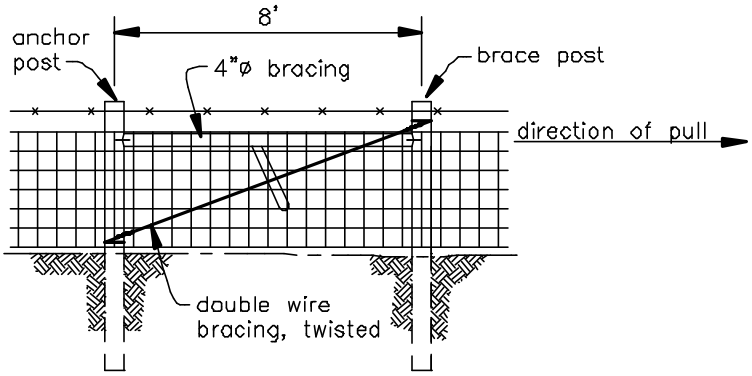

1–SPAN END

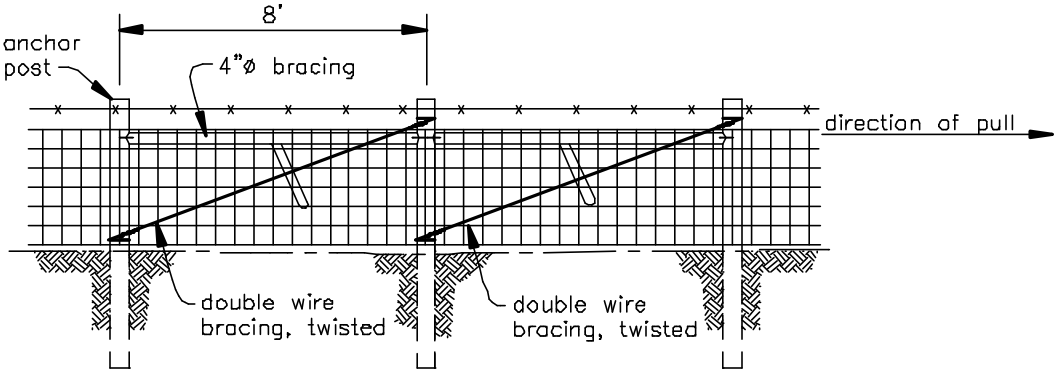

2–SPAN END

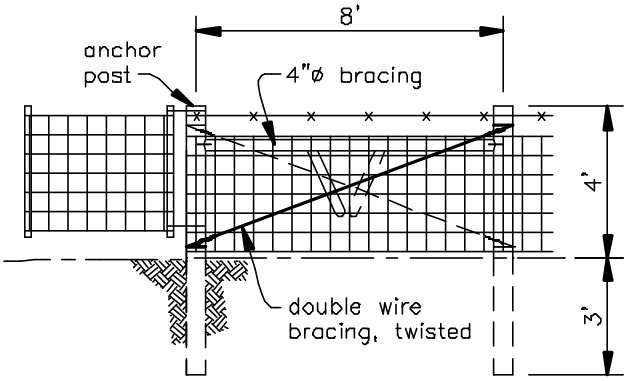

GATE BRACE

1. Double wrap all bracing.
2. All brace posts to be 7' long, 3' embedment.
3. Dap braces into posts.
4. Spike braces to posts.

Drawing not to scale. Standardized drawing must be adapted to the specific site.

	JOB CLASS	Designed ____ Date ____
	CAD FILE NO. LSK–0254.DWG	Drawn ____ Date ____
	SHEET OF	Checked ____ Date ____
U.S.D.A. NATURAL RESOURCES CONSERVATION SERVICE		Approved ____ Date ____