United States
Department of
Agriculture

Natural
Resources
Conservation
Service

October 2005

Wildfire Rehabilitation Assistance

What can you do to protect your home and property *after* a wildfire?

Wildfire Rehabilitation Assistance

Has your property been affected by wildfire? Are you unsure about what to do now and who to turn to for help? There are many factors that can affect your property after a wildfire. Because the vegetation that usually holds the soil in place has burned, there is no longer an anchor to stop soil from eroding. This can cause a whole new set of concerns such as debris flows, stream degradation, and noxious weed invasion. There are actions you can take now to help protect your property and avoid further damage.

The information in this booklet may be useful to you in making decisions about what practices to implement and how to install them to avoid a situation like that shown below. For more help in properly planning, installing, and maintaining practices to conserve your resources, contact your local USDA Natural Resources Conservation Service (NRCS) office. NRCS has an office in nearly every county and can be found in the phone book's Federal blue pages.

On July 22, 2001, an intense storm created a debris torrent in a very small (only one-half mile long) ephemeral drainage in the Bitterroot Valley. These photos show the sequence of events. Practices to help you prevent or avert this type of event are included in this booklet.

1. Debris flow as it starts to build

2. Water and debris against home

3. One hour after start of debris flow

Wildfire Burn Intensity Classification

The following burn intensity classifications can be used to estimate soil heating by vegetative and physical conditions. Wildfire burn intensity is very useful in preparing rehabilitation plans and planning other post-fire activities. To determine hydrophobicity, scrape ash away and pour water on the soil surface. Hydrophobic (water repellent) soils will cause water to bead at the surface for several minutes. Root damage can be determined by digging down and carefully examining the extent of root burning.

Low Fire Intensity (Type III)

General Statements:

- primarily occur on rangeland
- no sediment delivery
- natural recovery likely

Indicators:

- duff and debris are partly burned
- soil is a normal color
- hydrophobicity is low to absent
- standing trees may have some brown needles

Interpretations:

- root crowns and surface roots will resprout quickly (within one year)
- infiltration and erosion potential are not significantly changed

NOTE: After a wildfire, many trees are weakened from burning around the base of the trunk. The trees can fall over or blow down without warning. Shallow-rooted trees can also fall. Therefore, be extremely alert when around burned trees.

Medium Fire Intensity (Type II)

General Statements:

- primarily occur on steep, lightly timbered slopes with grass
- some sediment delivery

Indicators:

- duff is consumed
- burned needles are still evident
- ash is generally dark colored
- hydrophobicity is low to medium on surface soil up to one inch deep
- soil is brown to reddish-brown and up to two inches of soil is darkened from burning (below ash)
- roots are viable below one inch
- shrub stumps and small fuels are charred, but present
- standing trees are blackened but not charcoal

Interpretations:

- root crowns will usually resprout
- roots and rhizomes below one inch will resprout
- most perennial grasses will resprout
- vegetative recovery is one to five years
- soil erosion potential will increase due to the lack of ground cover and moderate hydrophobicity

High Fire Intensity (Type I)

General Statements:

- primarily occurs in unprotected drainages on steep, timbered, north or east slopes with dense forest canopy
- sediment delivery likely
- natural recovery limited

Indicators:

- duff consumed
- uniformly gray or white ash (in severe cases ash is thin and white or light)
- no shrub stumps or small fuels remain
- hydrophobicity medium to high - up to two inches deep
- two to four inches of soil is darkened (soil color often reddish orange)
- roots burned two to four inches
- soil physically affected (crusting, crystallization, agglomeration)
- standing trees charcoal up to one inch deep

Interpretations:

- soil productivity is significantly reduced
- some roots and rhizomes will resprout, but only those deep in soil
- vegetative recovery is five to ten years
- soil erosion potential can be significantly increased

Protect Your Home

Hillside lots that have been damaged by fire or are located in a fire-damaged watershed can be susceptible to erosion, drainage, and other runoff-related problems. Torrential or prolonged rains cause the most damage. To treat surface drainage problems, you will first need to identify the sources of surface water (runoff) flowing onto or over your property. Walk outside and around your home. As you walk, observe the "lay" of your lot and the surrounding properties. Also, observe your roof and driveway. Is your home on top of a hill where all surface waters drain away from your home? If so, you will be concerned with holding topsoil on your property. Few homeowners live on top of a hill so it is more likely that water will flow onto your property from an adjacent hillside. Where will the water concentrate and how can you control the sediment that is carried with the water?

Gutters and Downspouts Direct Roof Runoff

Be sure your roof is properly fitted with gutters and downspouts that will release water onto a non-erodible surface such as a paved driveway. Or you can connect downspouts firmly to solid plastic pipe that will carry water down-slope away from your home to a place where it will be released safely, such as a paved roadside or storm drain ditch.

Because twigs, pine needles, and leaves can clog gutters and downspouts, the use of gutter guards that are made of one-quarter- to one-half-inch hardware cloth screen is highly recommended. Clear your gutters regularly and inspect them to ensure your roof runoff system is working properly.

Curbs and Berms Protect Sensitive Slopes

A concrete curb, a compacted earth berm, or other similar structure on the outside edge of a driveway or building pad can direct runoff away from sensitive slopes to an area where it can be released safely. The recommended height of the berm is a minimum of 12 to 18 inches. A pipe drop may be used to carry runoff down slope to a place where it can be released safely, such as a lined roadside ditch or storm drain.

Lined Ditches Handle Road and Driveway Runoff

Roads and driveways can be graded toward a lined ditch or street-side gutter designed to handle sheet flow water from paved surfaces and uphill slopes. At specific intervals along the main road, water may be transported under the road through a culvert and released safely onto a non-erodible surface. An energy dissipater, such as a rock lined outlet, can serve this purpose where slope is minimal. In steeper areas or where large volumes of water may accumulate, other precautions may be needed to prevent washouts or localized flooding.

Proper Grading Promotes Good Drainage

Proper grading of your land helps prevent water from pooling around foundations, flooding basements or below grade structural components, or concentrating water into destructive volumes. In general, grade surfaces around a home so runoff flows away from foundations at a minimum slope of one to two feet for every 100 feet. Grade and compact surfaces evenly since water can collect in depressions or channelize into destructive flows.

Drainage for Retaining Walls

Good drainage must be provided for solid construction retaining walls. Properly placed weep holes and perforated pipe with a gravel backfill behind the wall work well. The small openings between wood boards or non-grouted brick, stone or concrete block retaining walls also serve this purpose. Many walls are not designed for saturated soils or ponded water behind them and can break, tip over, or slide if they don't have good drainage behind them.

Runoff Diversions

A diversion may be needed to handle surface runoff flowing onto your property from upslope. For slopes steeper than two percent, or where large amounts of water are expected, the diversion channel will require an erosion resistant lining. Direct water to a safe, non-erodible outlet and never directly onto the downstream slope itself. Never direct water onto adjoining property without consulting the owners. Always consult a qualified engineer to design water diversion measures.

Maintenance

Regular maintenance of drainage systems will keep your drainage problems to a minimum. Remember that regular maintenance saves time and money in the long run. Maintenance should include the following items:

- Check gutters, downspouts and pipes during and after storms and remove debris that might cause clogging.
- Regularly inspect, clean, and repair berms and ditches.
- Check for and repair any damage caused by burrowing animals.
- Seed and mulch or otherwise vegetate all bare areas, especially on slopes.

Safety Measures

Do not start any work until you are sure that both above-ground and underground utility lines will not be affected by your work. The location of underground utility lines can be obtained by calling the Utility Notification Center at 1-800-424-5555 or by calling your local utility companies. Also, do not release runoff onto septic leach fields or at the base of structural foundations.

A rock-lined channel and concrete barriers were built to protect a home in the Dickson Creek area from debris flows and water erosion.

The barriers directed flows away from the home and driveway, while the rock lining protected the channel itself from erosion. The system worked exactly as it was designed to work.

Mulching

What is Mulching?

The application of grass hay or straw as a protective cover over seeded areas. The purpose is to reduce erosion and aid in revegetation or protect bare soils that will be landscaped later.

When Should Mulching be Used?

Use this method on slopes that have a high potential for erosion. Mulch forms a loose layer when applied over a loose soil surface. To protect the mulch from movement by wind or water, it must be punched into the soil or covered with erosion control netting. The mulch should cover the entire seeded or bare area and extend into existing vegetation or be stabilized on all sides to prevent wind or water damage that may start at the edges.

Methods and Materials

Grass hay or straw mulch can be applied by hand broadcasting to a uniform depth of about two inches. When applied properly, approximately 20-40 percent of the original ground surface can be seen. The application rate per acre should be about two tons (or one 60-pound bale per 650 square feet). Although grass hay works the best for this purpose, clean rice, barley, or wheat straw may also be used. You could also hire a contractor to grind the mulch using a tub grinder and then blow the mulch out over the slope with another piece of equipment.

Most landowners can obtain the equipment to anchor the mulch by hand punching or using erosion control netting. However, you may need to hire a contractor for roller or crimper punching and for hydro-mulching.

Hand Punching: Use a spade or shovel to punch straw into the slope until all areas have some straw standing perpendicular to the slope and embedded at least four inches into the ground. The mulch should be punched about every 12 inches.

Erosion Control Netting: Erosion control netting is used on large, steep areas that cannot be punched with a roller or by hand. Jute, wood excelsior, or plastic netting is rolled out over unpunched straw and installed with manufacturer-recommended staples or staked down. This material can be purchased from a construction material supplier.

Roller Punching: A roller equipped with straight studs not less than six inches long, from four to six inches wide, and approximately one inch thick is rolled over the slope. You may need to hire a contractor for this task.

Crimper Punching: Crimper punching is like roller punching except the crimper has serrated disks about four to eight inches apart that force straw mulch into the soil. Crimping should be done in two directions with the final pass across the slope, if possible. You may need to hire a contractor for this task.

Hydro-Mulching: This practice is a two-step practice that applies seeds for revegetation and then applies mulch with a tackifier or substance that helps the mulch adhere to the soil surface.

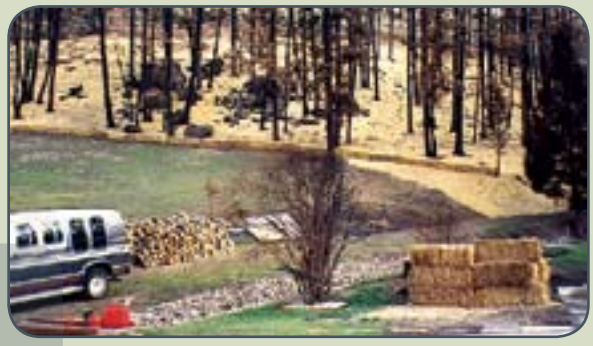

Mulching and straw check dams were applied at the mouth of this drainage to protect a home from erosion.

Erosion Control Netting

What is Erosion Control Netting?

Erosion control netting is a temporary measure to protect the soil surface. It is usually made of a synthetic material that is laid and anchored over straw or other mulch to hold the mulch in place and protect it from wind and water damage. It reduces soil erosion and provides a good environment for vegetative regrowth. The material is photodegradable or biodegradable, so it will eventually decompose and is not a threat to the environment.

When is Erosion Control Netting Used?

This practice is often used on areas that may erode near structures such as homes, roads, and bridges. Erosion control netting can be used on small, moderately steep, disturbed areas. Jute or coir netting can also be applied without mulch on flat sites for dust control and seed germination enhancement. However, it should not be used without mulch where runoff quantities are expected to be high. Erosion control netting is not appropriate in all situations, and the local NRCS office can help you decide if the use of netting is appropriate in your case. Situations when netting may not be appropriate include the following.

1. Steep slopes with sandy soils
2. Steep slopes with many rocks on the surface
3. Steep slopes with a lot of burned vegetation remaining

How is Erosion Control Netting Installed?

The soil surface should be reasonably smooth. Rocks and other obstructions which rise above the level of the soil and mulch must be removed. Erosion control netting can be purchased from a construction material supplier. Individual rolls of erosion control netting should be applied up and down the slope and never along the contour. The end of the netting at the top of the disturbed area should be buried in a trench at least eight inches deep. Rolls should be laid out so that edges overlap each other by at least six inches across the slope. When more than one roll is required going down the slope, the ends should overlap by at least three feet in a shingle fashion. This is extremely important!

Anchor pins or staples are used to anchor the netting to the soil surface. Anchor pins are made of rigid, 0.12-inch diameter or heavier, galvanized wire with a minimum length of 10 inches for hook or "J" type pins. Staples should be of wire .09 inches in diameter or greater and should have U-shaped legs at least six inches in length. Longer staples are needed for sandy soil.

Staples or anchor pins need to be driven perpendicularly into the slope face and should be spaced about five feet apart down the sides and center of the roll. Staples at the upper end of a roll and at the end overlap of two rolls should not be greater than one foot apart.

Erosion control netting should go beyond the edge of the mulched or seeded area by at least one foot at the sides and three feet at the bottom. If there is existing vegetation at the boundaries of the area, the erosion control netting should be continued into the stable vegetated area or to the edge of a structure.

Volunteers and NRCS employees apply erosion control netting, construct straw check dams, and use straw mulching to reduce erosion in this small, ephemeral drainage that was severely burned in the Bitterroot Valley during 2000.

Erosion Control Netting Illustration

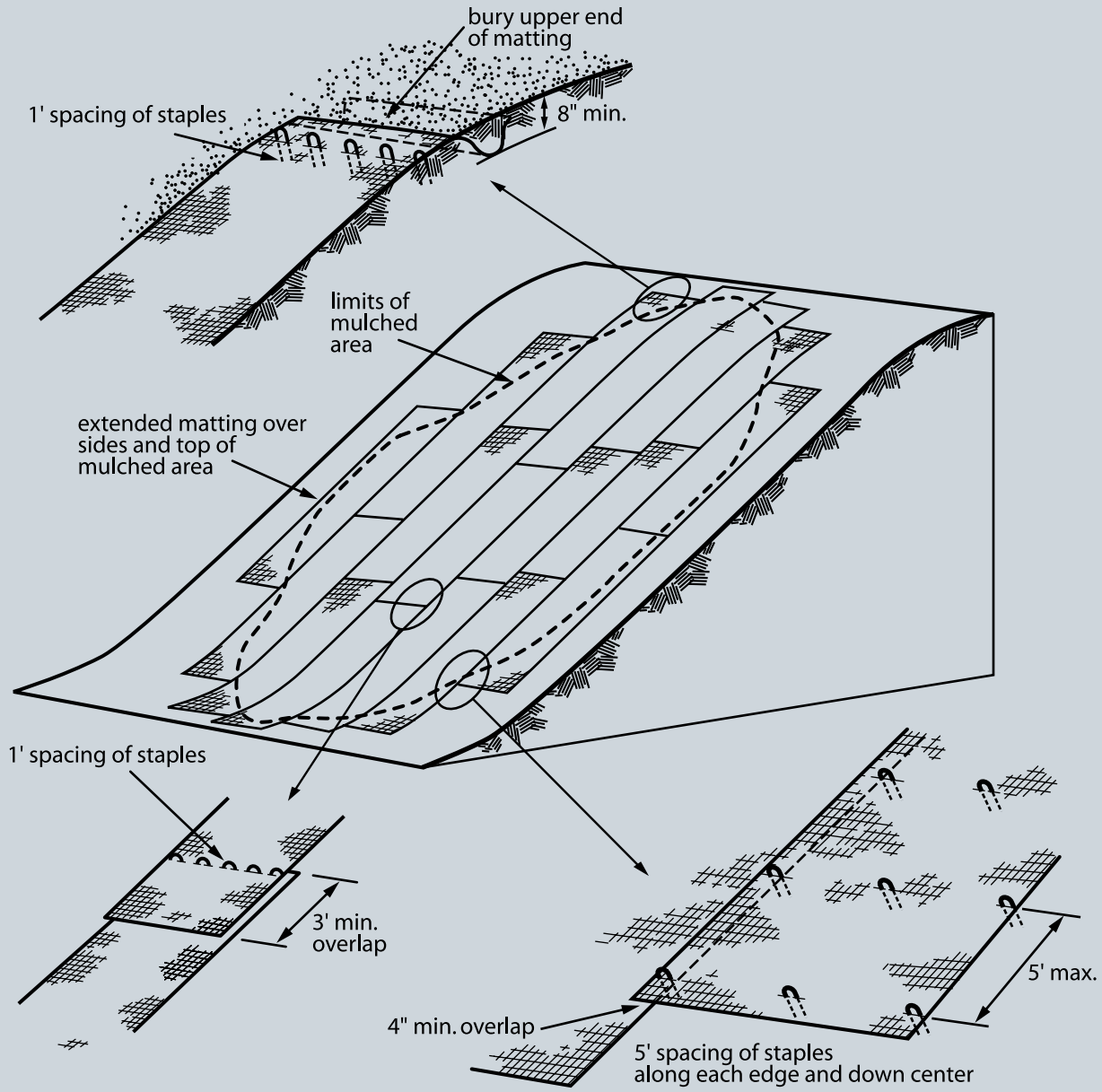

Contour Log Felling

What is Contour Log Felling?

Contour log felling is a way to reduce the amount of water that runs down a slope by cutting trees so that they fall perpendicular to the main direction of the slope (to lie along the contour).

When is Contour Log Felling Used?

Contour log felling is used on burned slopes where there are a number of dead trees that have little alternative value. When the original ground cover is lost after a wildfire, the soil is at risk for erosion. Additionally, drainageways may flood more frequently due to increased runoff from the

burned slopes. Contour log felling is a way to use the dead timber for some beneficial purpose. Consider leaving some dead trees for wildlife habitat.

Also, note that contour log felling in burned areas is dangerous due to a significant risk that trees may fall down or drop branches on workers with little or no warning. If you do not have the equipment or skills to do this work, you can hire experienced contractors.

Logs or slash from the felling should not be placed in drainageways or swales. When unanchored, the logs or debris may be washed downstream, causing damage to drainage improvements or blocking natural channels, resulting in increased erosion.

How is Contour Log Felling Accomplished?

Trees are cut so that the trunks drop across the slope perpendicular to the flow of water. Stumps should be left about 12 inches high to be used along with stakes or stable, standing trees at each end of the log to brace it from sliding downhill. Tree limbs are removed to the extent necessary for the log to lie flat on the ground, encouraging the collection of water and trapping debris moving down the slope. A trench eight to 12 inches deep should be dug on the uphill side of each log to catch debris. This soil should be tamped into gaps between the log and the ground to prevent water from eroding under the log.

For this practice to be most effective, enough trees must be felled to create a barrier that interrupts the movement of water down the slope.

How Effective is Contour Log Felling?

When there are 400 to 600 feet of logs available per acre (about 30 logs 20 feet long and 10 inches in diameter), contour log felling may significantly increase infiltration, add surface roughness, and replace some lost cover, thus reducing erosion potential. At best, contour log felling provides short-term protection on slopes that require reestablishment of permanent vegetation for long-term erosion control.

Contour log felling has little effect when logs are oriented up and down the slope instead of across it, when felled logs are not in contact with the soil, where the slope is steeper than 50 percent, and where the density of logs is less than 400 feet per acre.

	Recommended Horizontal Spacing (feet)		
Slope Gradient (percent)	Low Fire Intensity	Medium Fire Intensity	High Fire Intensity
<5%	250	160	130
5-10%	200	120	90
10-20%	120	60	40
20-50%	60	30	20
>50%	40	20	20

With contour log felling, trees are placed directly on the ground and staked in or wedged behind stumps.

Contour Log Felling Illustration

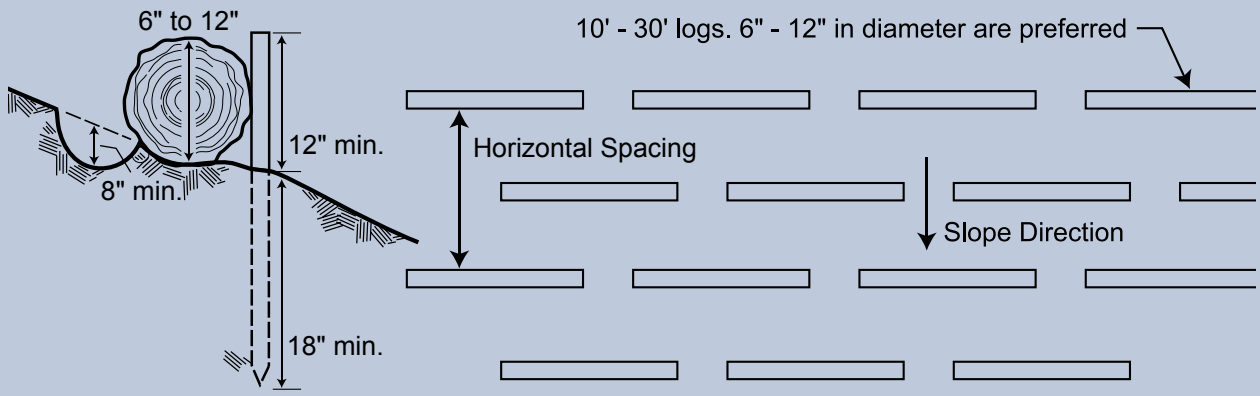

Revegetating After Wildfires

Loss of vegetation leaves land vulnerable to increased runoff, erosion, and sedimentation; encourages weeds; degrades habitat; and impairs forest regeneration. Revegetation is a good step to take toward controlling noxious weed invasion after a wildfire. For more information about weed suppression, you could also contact your county weed coordinators. Reestablishment of permanent vegetation provides long-term erosion control, protection, and site stability. This practice is the least expensive per acre. It directly addresses the resource concerns, and it is best suited to addressing concerns over larger areas.

What Areas Need Revegetating?

In general, severely and moderately burned sites should be reseeded to decrease the likelihood of erosion and sediment movement down slopes, to discourage weed invasion, and to fulfill management objectives. Since lightly burned areas recover quite quickly from wildfire, reseeding is usually not necessary.

When Should I Plant?

Grasses and forbs should be planted after the wildfire or ground disturbance when the soil surface is loose. Seeding in late fall or winter (even if there are a few inches of snow) improves success. The prime time to seed is immediately prior to the ground freezing. Trees or shrubs should be planted in the fall or early spring when plants are dormant.

What Should I Plant?

Perennial grasses and forbs are slower to establish, but provide long-term cover for reseeded sites. Sites to revegetate with perennial grasses and forbs include severely burned sites and moderately burned sites that had populations of noxious weeds before the wildfire or that are less than 50 feet from a drainage channel. For example, slender wheatgrass is a native grass that establishes quickly and is moderately long-lived. Over time, as the slender wheatgrass begins to die out, other native species begin to fill in the site.

Annual ryegrass and small grains are useful when quick establishment is key; however, they only provide one year of protection. Revegetate with annual species where perennial grasses will recover naturally, including moderately burned sites with slopes greater than 15 percent. For example, winter wheat is a good option if native seed varieties are unavailable.

How Much Should I Plant?

Most seedings are broadcast with either aircraft or ground equipment. Landowners can seed small areas using a hand-crank seed broadcaster. You should use certified seed of a known variety to get the best results. If a specified variety is not available, be sure the seed originated within a 500-mile radius of your property. Be sure seed does not contain any noxious weeds. Contact the local NRCS, Extension Service, or conservation district office for recommended varieties or substitute species.

The seed mixes in the following charts are appropriate for areas west of the Continental Divide and foothills/mountains east of the Divide. Ideally, you should choose one to three of these species for a mix. The tables give the "pure-stand" seeding rates for each species expressed as pounds of pure live seed (PLS) per acre. To calculate a mix, divide the species rate by the number of species in the mix. Then, take the lbs/ac and multiply by the total acres to be seeded. Double these seeding rates on severely burned areas or steep slopes.

For example, if you are using a mix of three grasses to be seeded on 10 acres, divide the lbs/ac for each species by three and then multiply by 10. For slender wheatgrass the equation would be (12/3)10 = 40 pounds of slender wheatgrass in the mix.

Is There Anything Else I Can Do to Help the Planting?

Mulching will stabilize the soil surface to prevent movement of soil particles and loss of seed. Use straw or grass hay mulch or netting on small areas of steep slopes. Apply mulch at 70 lbs/1,000 sq. ft. (about 43 bales per acre). Use weed free material. Do not fertilize the first year. Hydromulching should be done in two operations. First, use a mulch-seed mixture to distribute the seed. Then, use the remaining mulch over the top to increase contact of seeds with the soil.

Keep your work well-maintained by repairing any spots of failure with new seed, plants, and mulch. Fertilize after the first year in spring until vegetation is well established.

What Seeding Rates Should I Use?

Zone 1

Zone 1 is made up of dry, warm sites consisting of open grasslands and woodland benches at low elevations on all aspects and on south and west-facing slopes at higher elevations. Woodland sites are dominated by dry Douglas-fir, limber pine, and ponderosa pine habitat types with a significant bunch grass component in the understory.

Grass/Forb Species	Native/Introduced	Pounds PLS per acre at 40 seeds per square foot
'Pryor' Slender wheatgrass	N	12
'Critana' Thickspike wheatgrass	N	12
'Sodar' Streambank wheatgrass	N	11
'Goldar' Bluebunch wheatgrass	N	12
'Sherman' Big bluegrass	N	2
'Manska' Pubescent wheatgrass	I	30
'Covar' Sheep fescue	I	3
'Durar' Hard fescue	I	3
Yellow sweet clover	I	(no more than 1/2 lb/ac)
Dryland alfalfa varieties	I	(no more than 1/2 lb/ac)

Zone 2
Zone 2 is made up of moist, warm sites consisting of moderate environments receiving more effective precipitation than the dry, warm sites. Zone 2 sites are found on north and east-facing slopes at lower elevations, on all aspects at mid-elevations, and on south and west-facing aspects at higher elevations. Sites are dominated by Douglas-fir and ponderosa pine habitat types.

Grass/Forb Species	Native/Introduced	Pounds PLS per acre at 40 seeds per square foot
'Pryor' Slender wheatgrass	N	12
'Critana' Thickspike wheatgrass	N	12
'Sodar' Streambank wheatgrass	N	11
'Whitmar' Beardless wheatgrass	N	12
'Sherman' Big bluegrass	N	2
'Garnet' Mountain brome	N	22
'Rush' Intermediate wheatgrass	I	22
Nevada bluegrass	I	2
'Covar' Sheep fescue	I	3
'Durar' Hard fescue	I	3
'Paiute' Orchardgrass	I	4
White Dutch, red, or white clover	I	2
Yellow sweet clover	I	(no more than 1/2 lb/ac)
Alfalfa	I	(no more than 1/2 lb/ac)
Sanfoin	I	(no more than 4 lbs/ac)

Zone 3
Zone 3 is made up of moist, cool sites. Zone 3 sites are found predominantly on north and east-facing slopes at mid-elevations and on all aspects at high elevations. Sites are dominated by Douglas-fir with blue huckleberry in the understory along with Grand fir, western cedar, and western hemlock habitat types.

Grass/Forb Species	Native/Introduced	Pounds PLS per acre at 40 seeds per square foot
'Pryor' Slender wheatgrass	N	12
'Whitmar' Beardless wheatgrass	N	12
'Sherman' Big bluegrass	N	2
Tufted hairgrass	N	1
'Garnet' Mountain brome	N	22
'Rush' Intermediate wheatgrass	I	22
'Paiute' Orchardgrass	I	4
'Covar' Sheep fescue	I	3
'Durar' Hard fescue	I	3
Nevada bluegrass	I	2
Alsike, red, or white clover	I	(no more than 1/2 lb/ac)
Birdsfoot trefoil	I	(no more than 1/2 lb/ac)

Zone 4
Zone 4 is made up of riparian areas including stream bottoms and wet meadows. These sites are subirrigated or wetter for at least a portion of each growing season.

Grass/Forb Species	Native/Introduced	Pounds PLS per acre at 40 seeds per square foot
'Pryor' Slender wheatgrass	N	12
Basin Wildrye	N	2
Meadow foxtail	I	2
Birdsfoot trefoil	I	(no more than 1/2 lb/ac)
Alsike clover	I	(no more than 1/2 lb/ac)

More than 5,200 acres of private land were aerial seeded with slender wheatgrass in the Bitterroot Valley during 2000. Aerial grass seeding was very successful in most cases.

Some areas, such as stream banks and slopes around homes, were also hydro-seeded to provide immediate cover.

Contour Scarification

What is Contour Scarification?
The upper part of the soil profile is tilled and mixed across the slope on the contour using small machinery or construction equipment. The purposes of this practice are to break up the hydrophobic characteristics of soil in moderate and severely burned areas, to aid in the establishment of vegetative cover from seed, to reduce runoff velocity, to increase infiltration, and to reduce erosion.

When is Contour Scarification Used?
Contour scarification is used on burned upland areas with hydrophobic soil properties that are accessible by machines and will be stabilized with seeded vegetation. Slopes should be equal to or less than 30 percent to facilitate safe operation of machinery. Slopes with a stable rock face do not require scarification. Contour scarification is not used in swales, drainage ways, gullies, or other areas of concentrated flow. One hindrance to contour scarification is that there is often too many burned trees in the way to use equipment.

How is Contour Scarification Performed?
Small tractors, bulldozers, or all-terrain vehicles are fitted with a tool bar containing tines, rippers, or other devices capable of loosening and mixing the soil to a depth of two to four

inches. A contour line is marked about one-third the way down the slope to establish a key line. The machines are operated parallel to the key line. The entire slope may be scarified to accomplish the maximum effect. To reduce treatment costs, contour scarification can be accomplished in eight- to 10-foot-wide strips spaced uniformly over the slope. The maximum recommended spacing between scarified strips is shown below.

Slope Gradient (percent)	Contour Strip Spacing (feet)
<5%	160
5-10%	120
10-20%	60
20-30%	30
>30%	not recommended

Salvage Merchantable Trees

Harvesting fire-killed trees can provide an income to offset fire losses, reduce the safety hazard of falling trees, and prepare the site for revegetation treatments. However, burn areas are much more susceptible to soil compaction, increased erosion, and slope failure. Careful logging operations are required. More information on stream and forestry management practices and 310 permits is available from the Montana Department of Natural Resources and Conservation. Consider the following points when salvage logging:

- Use designated skid trails and install water bars after logging
- Seed grass on disturbed areas (skid trails, landings, roads)
- Leave slash on-site, not at landings
- Follow Streamside Management Zone rules
- Implement forestry best management practices
- Obtain a 310 permit for work in or near streams from your local conservation district

Sandbag Barrier

What is a Sandbag Barrier?

A sandbag barrier is an inexpensive, temporary barrier or wall, one to two feet high that is constructed by stacking sand-filled or earth-filled sandbags and placing them to divert mud and other debris flows away from buildings. However, these barriers do not provide protection from high debris flows.

When is a Sandbag Barrier Used?

These barriers are used to protect building sites vulnerable to low mud debris flows from steep, erodible slopes that are partially or completely void of vegetation due to wildfire burns. This is an inexpensive, temporary protection method that can be used by homeowners before predicted rainfall. Sandbags deteriorate when exposed to continued wetting and drying for several months. If the bags need to be used for more than a few months, cement can be mixed with the sand. The cement and sand mixture will harden when the bags dry.

How is a Sandbag Barrier Installed?

Fill sandbags half full using sand or local soil, fold the top of the sandbag down, and then place

the bag on its folded top. Place each sandbag as shown, finishing each layer before starting the next. Limit placement to two layers unless they are stacked against a building or sandbags are pyramided. It is important to place the bags with the folded top in the upstream or uphill direction facing the flow of water to prevent them from opening when water runs by.

Sandbag Barrier Illustration

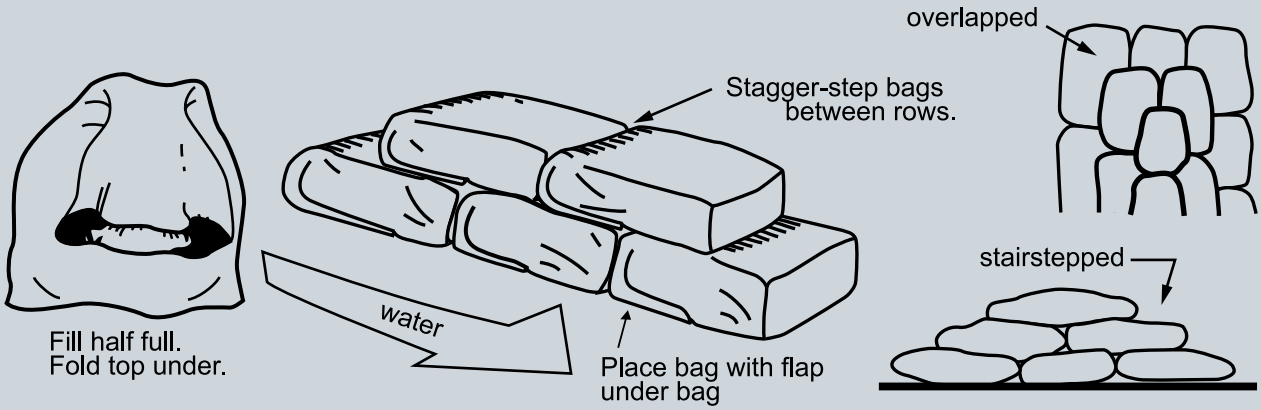

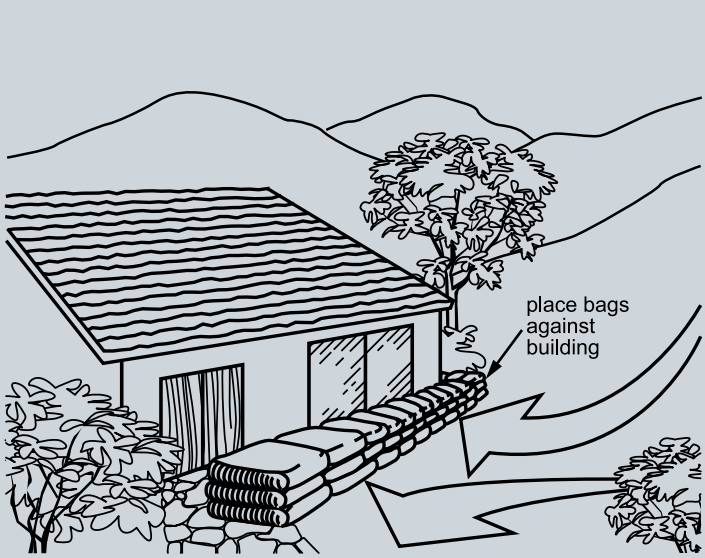

BUILDING PROTECTION

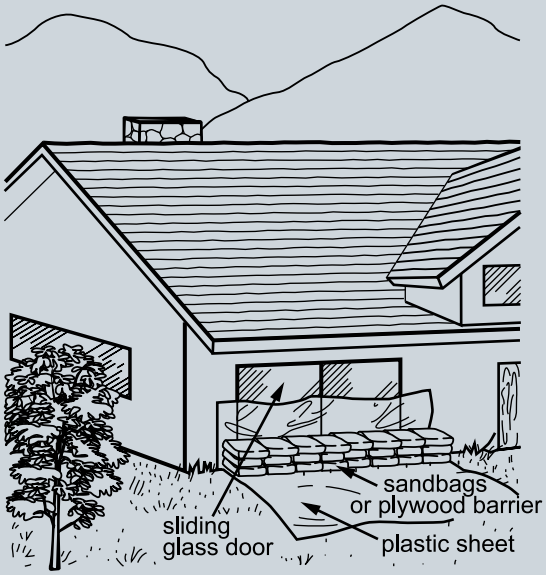

SEALING A SLIDING GLASS DOOR

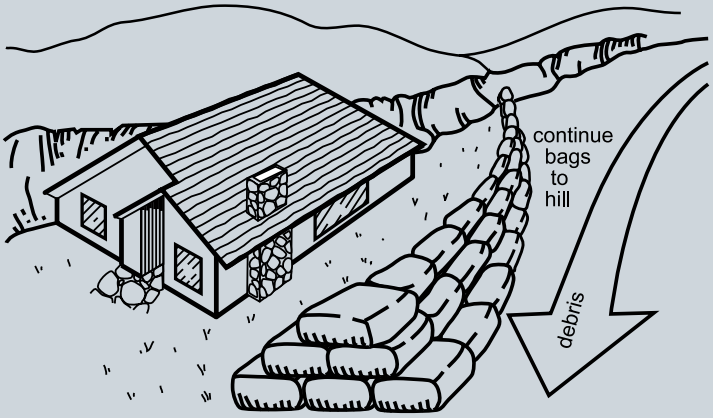

DIRECTING DEBRIS AWAY FROM BUILDINGS

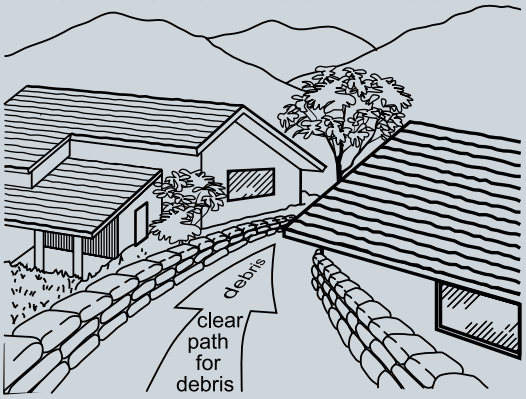

DIRECTING FLOWS BETWEEN BUILDINGS

Stream Channel Conductivity

Channels can become plugged from debris torrents following rains on burned areas. Runoff then flows over land or cuts new channels causing more erosion. Possible treatments include frequently checking and cleaning out culverts and removing only excessive amounts of loose debris from channel areas, leaving some anchored debris for in-stream stability.

An NRCS employee checks to see if a culvert is blocked by debris flows.

Volunteers remove debris from a stream ravaged by flows after heavy rains fell in the Bitterroot area after the 2000 fires.

Silt Fence

What is a Silt Fence?

This is a temporary barrier made of woven wire and fabric filter cloth (geotextile) that is used to catch sediment-laden runoff from small areas of disturbed soil to keep silt from getting in streams and homes.

When is a Silt Fence Used?

Silt fences are used for specific situations. Major considerations are slope, slope length, and the amount of drainage area from which the fence will catch runoff. Silt fences should be installed on the contour of a slope. Silt fences should not be installed across drainage ways, swales, gullies, ditches or other areas of concentrated water flow. Silt fences should be installed near homes, roads, ponds, and streams to divert debris flows away from these sites. Here are some design considerations:

Slope Steepness	Maximum Slope Length
2:1—(50%)	50 feet
3:1—(33%)	75 feet
4:1—(25%)	125 feet
5:1—(20%)	175 feet
<5:1—(<20%)	200 feet

What Materials are Needed?

Fence Posts: Posts should be at least 36 inches long. Wood posts should be of hardwood with a minimum cross-section area of three inches. Steel posts should be standard "T" section and should weigh no less than one pound per linear foot.

Wire: Wire fence should be at least 14-gauge with openings no larger than six inches square.

Geotextile Fabric: Geotextile fabric should have the following minimum material properties to be suitable for this type of use.

Availability: These materials can be obtained from fencing contractors, ranch equipment suppliers, and home improvement stores.

Geotextile Property	Minimum Acceptable Value	Test Method
Grab Tensile Strength (lb)	90	ASTM D1682
Elongation at Failure (%)	50	ASTM D1682
Mullen Burst Strength (PSI)	190	ASTM D3786
Puncture Strength (lb)	40	ASTM D751 (mod)
Equivalent Opening Size	40-80	US standard sieve sizes
Ultraviolet Radiation Stability	90	ASTM G26

How is a Silt Fence Installed?

Prefabricated silt fence should be used whenever possible to minimize installation labor requirements. An eight-inch deep trench is dug along the silt fence alignment. The silt fence is unrolled and stretched tight while the posts are driven at least 16 inches below the ground surface. Sections of silt fence shall be joined at a post by overlapping the geotextile six inches and wrapping it around the post before the post is driven. The wire shall be overlapped and wired to the post. After the silt fence is erected, the trench is backfilled and the backfill is tamped by wheel rolling with small equipment or foot traffic.

What Maintenance is Needed?

Inspect the silt fence after every runoff event. Repair any damage immediately. Remove sediment and other debris from the upstream side of the fence when it accumulates to the extent that visible bulges develop in the silt fence. Remove the silt fence after vegetation or other permanent erosion control measures are installed and functional.

Silt Fence Illustration

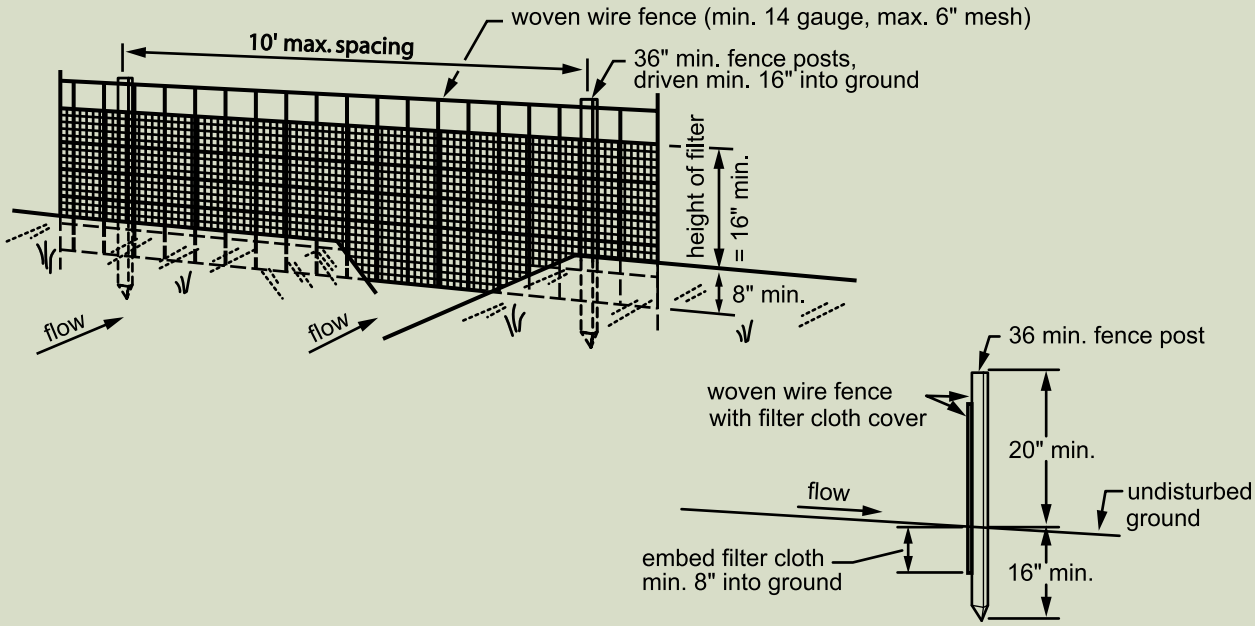

Straw Bale Check Dam

What is a Straw Bale Check Dam?

These are temporary sediment barriers constructed of straw bales across very small drainages.

When is a Straw Bale Check Dam Used?

These temporary structures are used to slow debris flow. They are not intended to provide protection from large storm events or to control debris flows in water bodies such as creeks, streams and rivers. Straw bale check dam design limits are as follows:

Slope	Maximum Drainage Area Between Check Dams	Maximum Slope Length
0-15%	1 acre	200 feet
15-20%	1/2 acre	100 feet
>20%	not recommended	

How are Straw Bale Check Dams Installed?

Bales should be bound with wire or polypropylene twine. Bales bound with sisal twine are less durable. The bales should be placed in rows with bale ends tightly abutting the adjacent bales.

Downstream Row: (Refer to Illustrations 1 and 2) Dig a trench across the small channel, wide enough and deep enough so that the top of the row of bales placed on their long, wide side is level with the ground.

The tops of bales across the center of the channel should all be level and set at the same elevation. Place the bales in position and stake them according to the instructions below.

Upstream Row: Dig another trench across the small channel, upstream and immediately adjacent to the first row of bales. The trench should be wide enough to accommodate a row of bales set vertically on their long edge. The trench should be deep enough so that at least six inches of each bale is below ground, starting with the bale in the center of the channel bottom. The trench should be as level as possible so that the tops of the bales across the center of the channel are level and water can flow evenly across them. Continue this trench up the side slopes of the small channel to a point where the unburied bottom line of the highest bale (point "C" on Illustration 3) is higher than the top of the bales that are in the center of the channel (point "D" on Illustration 3).

Anchorage: Drive two-inch by two-inch stakes or number 4 rebar through the bales and into the ground 18 to 24 inches for anchorage. The first stake in each bale should be driven toward a previously laid bale to force the bales together (see Illustration 3).

What Maintenance is Needed?

Inspect the bale check dam and provide necessary maintenance following each storm period. Remove the bales, stakes, and wire or twines once permanent drainage and stabilization is reestablished. Used straw can be used as mulch in other areas.

Straw Bale Check Dam Illustration

ILLUSTRATION 1: Top View

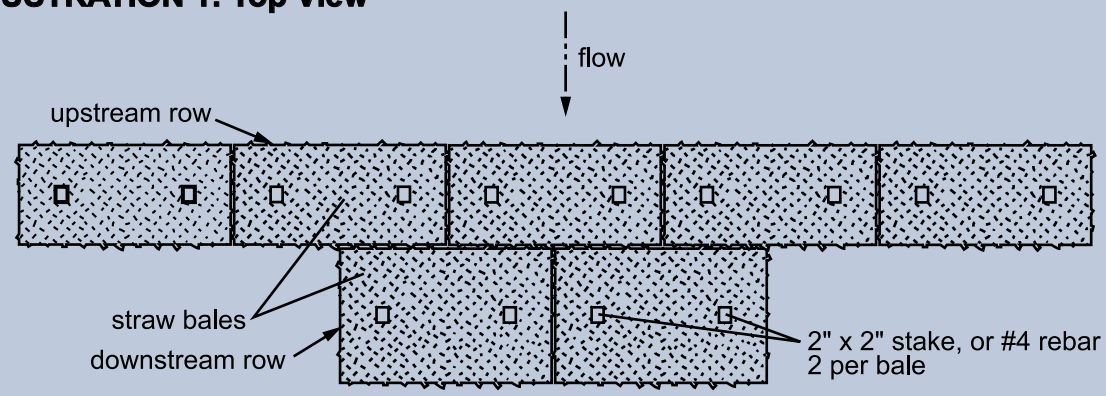

ILLUSTRATION 2: End View

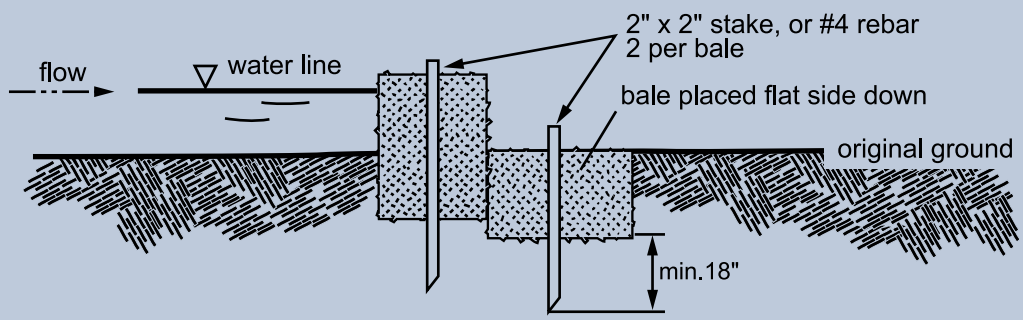

ILLUSTRATION 3: Upstream View

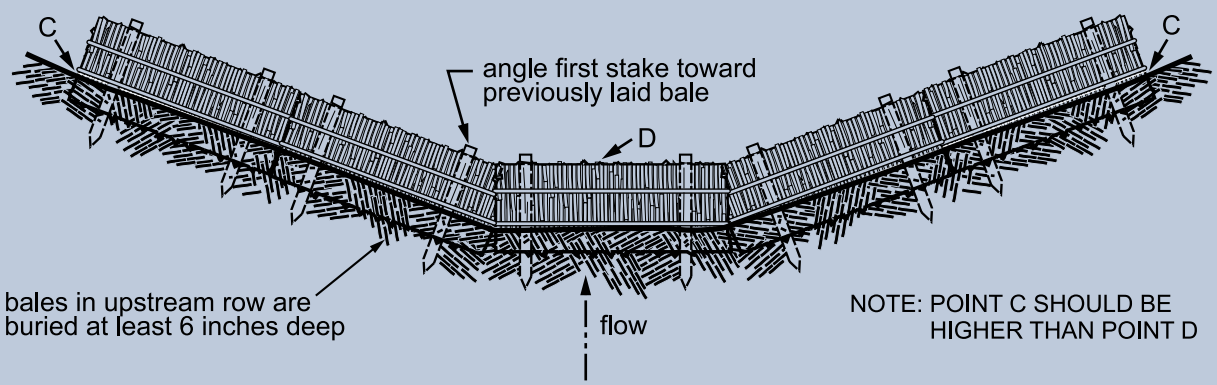

The U.S. Department of Agriculture (USDA) prohibits discrimination in all its programs and activities on the basis of race, color, national origin, sex, religion, age, disability, political beliefs, sexual orientation, and marital or family status. (Not all prohibited bases apply to all programs.) Persons with disabilities who require alternative means for communication of program information (Braille, large print, audiotape, etc.) should contact USDA's TARGET Center at 202-720-2600 (voice and TDD).

To file a complaint of discrimination write USDA, Director, Office of Civil Rights, Room 326-W, Whitten Building, 14th and Independence Avenue, SW, Washington, DC 20250-9410 or call 202-720-5964 (voice or TDD). USDA is an equal opportunity provider and employer.

MT 10/05