NRCS Natural Resources Conservation Service United States Department of Agriculture	COUNTY	PROJECT				FORM NO. REV.10/11 HI-ENG-028
	FIELD OFFICE	DRAWN BY CR	DATE NOV02	CHECKED BY JL	DATE NOV02	JOB NO.
	SUBJECT PARABOLIC DIVERSION					SHEET ____ OF ____

NOTE: CONSTRUCTION SHALL BE IN ACCORDANCE WITH THE ATTACHED SPECIFICATIONS.

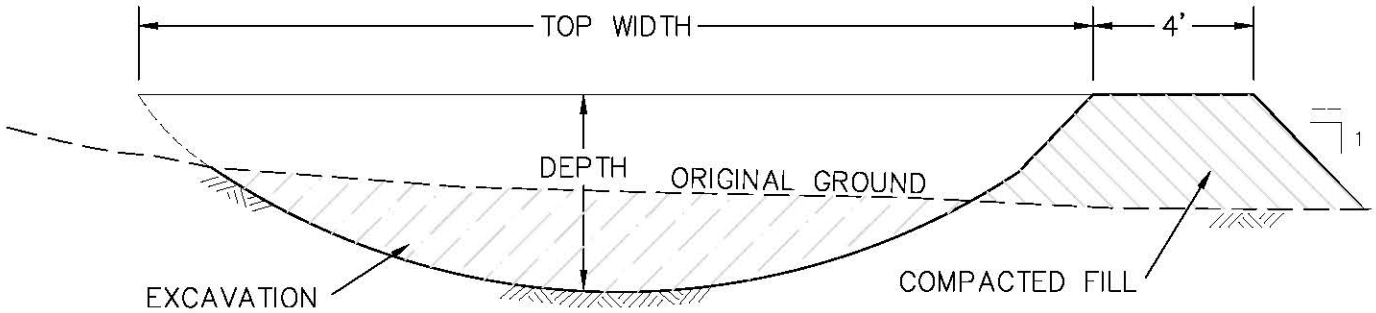

CROSS SECTION

NOT TO SCALE

STATION	CHANNEL SLOPE	TOP WIDTH	DEPTH
_____ TO _____	_____ FT/FT	_____ FEET _____ INCHES	_____ FEET _____ INCHES
_____ TO _____	_____ FT/FT	_____ FEET _____ INCHES	_____ FEET _____ INCHES
_____ TO _____	_____ FT/FT	_____ FEET _____ INCHES	_____ FEET _____ INCHES

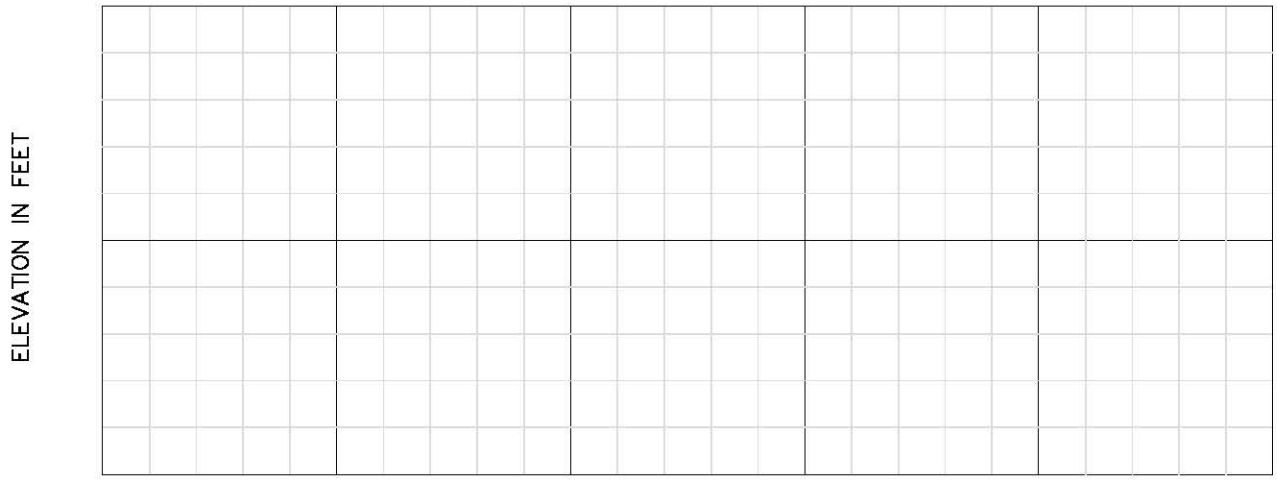

PROFILE