NRCS Natural Resources Conservation Service United States Department of Agriculture	COUNTY	PROJECT				FORM NO. REV.2011 HI–ENG–057
	FIELD OFFICE	DRAWN BY CR	DATE 17MAY11	CHECKED BY RDF	DATE 17MAY11	JOB NO.
	SUBJECT STANDARD TROUGH DETAIL W/O HEAVY USE AREA					SHEET ____ OF ____

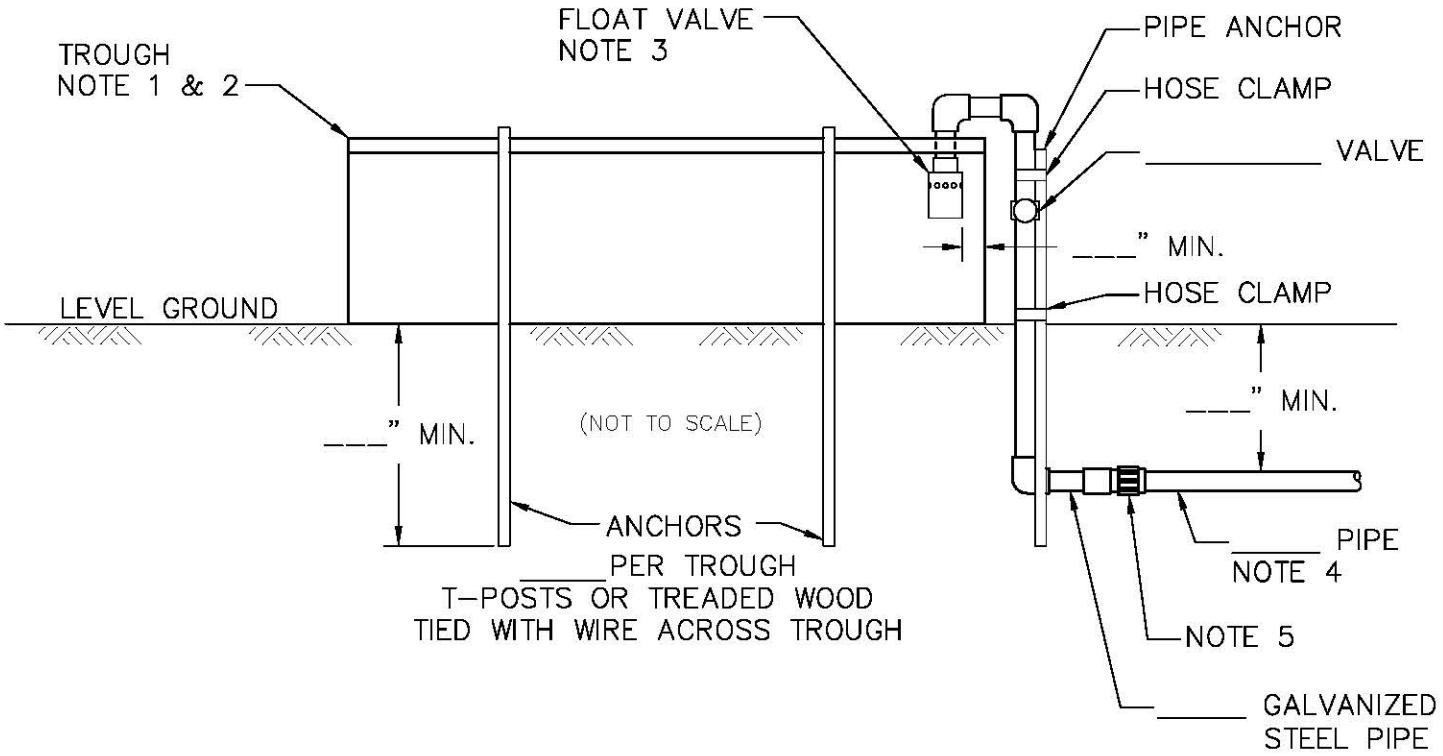

NOTES:

1. TROUGH VOLUME: _____
2. TROUGH MATERIAL: _____
3. FLOAT VALVE TYPE: _____
4. PIPE MATERIAL: _____
5. PIPE CONNECTOR: _____
6. CONSTRUCTION SHALL MEET NRCS WATERING FACILITY SPECIFICATION CODE 614

COMMENTS:

_____.

_____.

_____.

_____.